UNI EROPA

South Sumatera Forest Fire Management Project
Jl. Jenderal Sudirman No. 2837 KM 3,5 – PO Box 1229
Palembang 30129 – Sumatera Selatan – Indonesia
Telp: (62) 711-377821, Fax: (62) 711-353176
Email: ssffmp.eu@telkom.net

Industrial extension for firefighting equipment in South Sumatra (Second assignment, May-August 2004)

Gerald Hitzler

Final Report

September 2004

PREFACE (Second assignment May – Aug. 2004)

The South Sumatra Forest Fire Management Project (SSFFMP) is a technical co-operation project jointly funded (in terms of the financing memorandum IDN/RELEX/1999/0103) by the European Commission and by the Government of the Republic of Indonesia through the Ministry of Forestry (MoF).

This report has been completed in accordance with the project's Overall Work Plan (OWP) and the first and second Annual Work Plan (AWP I / II) and

in part fulfilment of Activity 2.4, "Purchase and distribute to relevant stakeholders locally adapted fire prevention, fire fighting and rescue equipment and train the fire crews in its use."

to achieve Result 2 "Stakeholders enabled to organize and apply fire management mechanisms in their areas."

to realise the five-year project purpose, which is "Aid and facilitate the establishment of a coordinated system of fire management at province, district, sub district and village level throughout South Sumatra province in which all involved stakeholders, including the private sector, work together to reduce the negative impact of fire on the natural and social environment."

This report has been prepared with financial assistance from the Commission of the European Communities. The opinions, views and recommendations expressed are those of the author and in no way reflect the official opinion of the Commission.

The report has been prepared by:

Gerald Hitzler

The report is acknowledged and approved for circulation by the SSFFMP Co-Directors

Palembang, 10 December 2004

Dr. Dodi Supriadi	Dr. Karl-Heinz Steinmann
National Co-Director	EU Co-Director

EXECUTIVE SUMMARY (RINGKASAN BAHASA INGGRIS)

One of the tasks of the SSFFMP is the distribution of fire fighting equipment to selected communities and districts in South Sumatra. The equipment should be appropriate, of good quality, and if possible locally produced. Local production of fire fighting equipment contributes to the creation of new job opportunities and employment. Further, additional know how is gained and developed among local production workshops. And last but not least sustainability is increased.

During the first phase of assignment in December 2003 the international expert has screened the available fire fighting equipment on provincial level. Several sources were checked and identified like hardware shops, dealers, and institutions. From local shops and dealers, equipment produced in Indonesia and from overseas, could be ordered in case of need. Samples of equipment are available at the project and at the DINAS Kehutanan store. Some of the samples have proven not to be suitable for the local conditions during fire fighting activities in the past.
Additional equipment for local production was identified by the project staff together with the consultant. Local production workshops were identified and checked about their capability and capacity to produce the identified equipment. Some workshops were selected for the production of priority equipment.

During the second phase of assignment in the time from May – August 2004, selected workshops received guidance on how to produce one important piece of equipment, the backpack pump. The workshops got equipment samples, materials and parts, drawings and other support. Frequent extension visits took place to guide and support the manufacturing process. On the job training and hands on support and instructions were also provided on difficult parts. Workshop staff got direct training about the manufacture of difficult key parts and components.
Jigs and fixtures were developed together and manufactured to improve and speed up the production process, and to ensure a high quality of the equipment. Jigs and fixtures support also the standardization of the production and ensure the supply of matching spare parts.
As many parts of the backpack pumps are cast from aluminium and brass, advice was given about the making and improving of moulding patterns. Drawings were produced, given and introduced to the workshops to support standardizing in production and additionally to ensure a high product quality.

Substantial time was needed for search and sourcing of suitable materials and parts. It is still difficult to find some of the crucial parts in Palembang or even in Jakarta. Certain compromises had to be made about quality and price. Information how and where to get the materials was given and shared with the selected manufacturers. Even equipment like a plastic welding press was purchased by the project and given on loan to a workshop for test and use. Such a type of machine was like new land to step on for the workshop. Staff needed some training on the job till proper handling was ensured.

A performance test with different types of power pumps was arranged and executed to find out what are the most suitable pumps for forest fire fighting in South Sumatra. Criteria where availability, ease of handling, performance, durability and finally price.

The preparation for production of flexible, frameless water tanks was continued but faced some obstacles. Strong reinforced PVC tarpaulin is not available in the Indonesian market and has to be imported. Dealers in Jakarta were not able to get small amounts from overseas for test trials. Plastic welding presses suitable for making this big type 2000 liter tanks must be imported, most likely at high prices or manufactured locally.

The production of hand tools was monitored. The two main contractors got advice on how to improve the quality and execute certain changes and improvement. Additional drawings and instructions were provided. ♦

RINGKASAN EKSEKUTIF

Salah satu dari tugas SSFFMP adalah mendistribusikan peralatan pemadaman kebakaran hutan dan lahan kepada masyarakat lokal dan kabupaten terpilih di Sumatera Selatan. Peralatan tersebut harus sesuai bagi masyarakat, berkualitas baik dan apabila memungkinkan dapat diproduksi secara lokal. Memproduksi peralatan pemadam kebakaran secara lokal memberikan kesempatan lapangan pekerjaan dan tenaga kerja baru. Lebih lanjut, pengetahuan bagaimana cara membuatnya diberikan dan dikembangkan pada beberapa bengkel lokal. Pada akhirnya kemahiran mereka dalam memproduksi peralatan tersebut diharapkan dapat meningkat.

Selama tahap pertama dari penugasan di bulan Desember 2003, tenaga ahli internasional telah memilah peralatan pemadam kebakaran hutan dan lahan yang tersedia di tingkat propinsi. Beberapa sumber produksi diperiksa dan ditentukan seperti bengkel peralatan, distributor dan institusi. Dari perusahaan, distributor sampai peralatan yang diproduksi secara lokal dan diimpor dari luar negeri dapat dipesan apabila diperlukan. Contoh dari peralatan tersebut dapat dilihat di kantor SSFFMP dan gudang Dinas Kehutanan. Beberapa contoh peralatan tersebut telah terbukti tidak sesuai untuk digunakan pada kondisi kegiatan pemadaman kebakaran hutan dan lahan lokal di masa lalu.

Tambahan peralatan sebagai contoh produksi lokal telah diidentifikasikan oleh staf SSFFMP bersama konsultan. Sejumlah bengkel yang memproduksi produk lokal ditetapkan dan diperiksa kemampuan dan kapasitas produksinya untuk membuat peralatan tersebut. Beberapa bengkel dan perusahaan dipilih untuk memproduksi sejumlah peralatan prioritas.

Pada tahap kedua dari masa penugasan di bulan Mei – Agustus 2004, bengkel terpilih menerima petunjuk bagaimana untuk memproduksi sebuah peralatan penting, pompa punggung. Bengkel-bengkel tersebut mendapat contoh peralatan, material, komponen, gambar kerja dan bantuan lainnya. Kunjungan yang teratur dilakukan untuk memberikan bimbingan dan bantuan dalam proses produksi. Bimbingan, contoh cara pengerjaan dan instruksi secara langsung diberikan pada pengerjaan komponen penting.

Mal dan cetakan dibuat bersama-sama untuk memperbaiki dan mempercepat proses produksi serta untuk menjamin kualitas yang baik dari komponen peralatan tersebut. Mal dan cetakan juga digunakan sebagai standarisasi dari komponen dan untuk menjamin bahwa komponen itu akan pas digunakan pada pompa punggung.

Karena sebagian besar komponen pompa punggung terbuat dari aluminium cor dan kuningan, saran telah diberikan untuk membuat dan memperhalus pola cetakan. Gambar kerja dibuat dan diperkenalkan kepada bengkel untuk membantu standarisasi produksi dan menjamin komponen yang dihasilkan berkualitas tinggi.

Tambahan waktu diperlukan dalam mencari sumber material dan komponen yang sesuai. Masih sangat sulit untuk mendapatkan beberapa komponen penting di Palembang atau bahkan di Jakarta sekalipun. Kesepakatan dibuat untuk mendapatkan kualitas dan harga tertentu. Informasi bagaimana dan dimana untuk mendapatkan material diberikan kepada bengkel terpilih. Bahkan peralatan *press* plastik dibeli oleh SSFFMP dan diberikan sebagai pinjaman kepada bengkel untuk dites dan dipergunakan. Mesin seperti itu bagi bengkel tersebut bagaikan “sebidang tanah baru yang belum pernah dijamah oleh manusia”.

Tes berbagai tipe pompa air dilakukan untuk mendapatkan contoh jenis pompa mana yang paling sesuai untuk dipergunakan dalam kegiatan pemadaman kebakaran hutan dan lahan di Sumatera Selatan. Kriteria yang dipergunakan adalah ketersediaan barang, kemudahan penggunaan, kemampuan kerja, ketahanan dan akhirnya harga.

Persiapan untuk produksi tangki air fleksibel yang tidak menggunakan rangka telah dilanjutkan tetapi mengalami beberapa kendala. Bahan *strong reinforced taurpalin* PVC tidak tersedia di Indonesia dan harus didatangkan dari luar negeri. Dealer di Jakarta tidak dapat mendatangkan dari luar negeri dalam jumlah kecil yang akan dipakai sebagai bahan percobaan. Peralatan press plastik yang sesuai untuk tangki sebesar 2000 liter harus didatangkan dari luar negeri dengan harga yang mahal atau harus dibuat secara lokal.

Produksi peralatan tangan dimonitor. Dua kontraktor utama mendapatkan saran bagaimana agar memperbaiki kualitas dan melakukan beberapa perubahan dan perbaikan. Tambahan gambar kerja dan instruksi telah diberikan. ♦

CONTENT LIST

1. INTRODUCTION

One of the tasks of the SSFFMP is the distribution of fire fighting equipment to selected communities and districts in South Sumatra. The equipment should be appropriate, of good quality, and if possible locally produced. Local production of fire fighting equipment contributes to the creation of new job opportunities and employment. Further, additional know how is gained and developed among local production workshops.

Efficient forest fire fighting needs appropriate and good equipment. In the case of Indonesia much equipment is imported. Hence, the local production of appropriate and good quality fire fighting equipment in South Sumatra can contribute in a number of ways towards the development of the province, to increase fire fighting capacities and finally support the reduction of land and forest fires.
Good equipment gives the local fire-fighters also the confidence that they are well equipped and not standing alone there with empty hands to fight land and forest fires. It creates a common bond among that men and women, that they can do something about land and forest fires and makes them more motivated to be active in prevention and fire fighting.

Among others, a number of specific, positive results of local production need be mentioned:

- The communities are equipped with effective and durable equipment
- Availability of suitable equipment at the local market
- Equipment is simple to maintain and to repair, and there is a reduced dependence from outside services and supply
- The establishment of a small local industry for fire fighting equipment guarantees a supply on a sustainable and reliable basis
- Equipment is adapted to local conditions and local experience is integrated
- Locally produced equipment is definitely cheaper than imported ones
- Spare parts for produced equipment are locally available

To continue in achieving the above mentioned benefits, the industrial extension consultant was focusing on following tasks during his second assignment:

- Follow up measures on activities undertaken during the first phase of assignment
- Intensify and continue work with selected workshops for equipment production
- Support workshops to the level of self running, independent production of selected equipment on high quality base and high reliability

- Search for other local available equipment to reduce the present dependence on imported and expensive equipment and parts
- Continue the search for local supply of raw materials and parts needed for production
- With the chosen workshops continue the development and use of suitable jigs and fixtures for standardizing of production and for high quality products
- Screen production of hand tools again about improvements an design and production process

Another advantage will be that plantations, wood processing companies and rural communities are more willing to procure fire fighting equipment, in case it is locally produced, adapted to local conditions and has an affordable lower price compared to imported products.

2. MAIN TASKS AND ACTIVITIES EXECUTED ACCORDING TO THE TERMS OF REFERENCE

After arriving at the project the activities got discussed and the work schedule was elaborated according to the terms of reference.

First priority work should be the start of mass production for backpack pumps, as the project would stop to purchase from Kalimantan because of not satisfying quality.

Second priority should have the work on power pumps and on collapsible tanks

Third priority should have further improvements on hand tools and the assurance of high quality and reliable local production.

2.1 Follow up measures for the first phase of assignment

After arriving at the project a short survey took place about the activities happened since the departure from the first assignment in December 2003.

The project had ordered more hand tools from the two local workshops here in Palembang. The supply is now stable and orders arrive on time. But there are still some minor problems regarding design, raw materials and quality.

About the power pump issue, the project had ordered two Wick 375 pumps, which had arrived together with hoses and nozzles. The pumps were not yet tested under realistic conditions.
Additionally during the assignment two other pumps available in Indonesia got ordered for testing (ONGA pump, one stage type; DAVEY pump, two stage type).

A second foldable 2000l water tank had also arrived but again was not yet tested under realistic conditions.

After December 2003 more backpack pumps from INDOFIRE Kalimantan have been ordered and distributed to local fire crews at villages. The order from Kalimantan was still necessary as the local workshops here in South Sumatra were not yet ready for mass production. Till now, there is no change in design from the manufacturer in Kalimantan to eradicate the weak points of his backpack pump. During SSFFMP fire-fighter training several problems were observed like tank leakage, broken filling ports, leaking hand pumps and others.

At the last assignment in December 2003 the decision was made about what type of backpack pump should be locally produced. A test of different types had shown that the “Indian Fire Pump” would be the best to use as a guideline on design and performance. The design of the hand sliding pump could be taken over apart from some changes to simplify production. The design of the flexible water tank was not taken over because of difficult access to the used heavy duty vinyl sheet and problems in plastic welding of thick wall tarpaulin. Instead thinner reinforced PVC tarpaulin with two layers is now in use. The tank gets meanwhile plastic welded and received further a cast aluminium filling port for durability.

Before departure to Indonesia from Germany contacts got established to a German tarpaulin manufacturer. The manufacturer provided a catalogue of different types of industrial tarpaulin samples for test. Small samples got welded with the plastic press and tested at the project. The manufacturer has been contacted again for shipment of more material for test trials on backpack pump tanks and big flexible tanks.

2.2 Intensified and continued work with selected workshops for equipment production

First priority was given, during the second assignment, for the continuation of work on backpack pumps (BPPs), followed by work on power pumps, flexible water tanks and hand tools.
During the last assignment first work on BPPs was done with selected workshops. RAPIH UTAMA was doing a first sample of a flexible backpack pump tank, while the workshop BIROTEHNIK WAHAB was doing two samples of BPPs hand sliding pumps. With BENGKEL NAGOJA and Bengkel Cor Logam “SENTOSA” samples of cast filling ports were produced.

Early in the second assignment, past activities and work with these workshops (mentioned above) were analysed and evaluated. As a result, a new selection took place to decide with which workshop to start mass production of BPPs.

RAPIH UTAMA and SENTOSA were finally selected again for the following reasons:

-RAPIH UTAMA had good experience in working with textile, tarpaulin and other plastic materials for tents, car interior, and furniture. The work on the flexible tank for the BPP prototype was successful and executed in an uncomplicated way. The calculated production price charged was realistic and acceptable.

One negative aspect was the missing plastic welding equipment and the inexperience in its use. An appropriate plastic welding press was later purchased in Jakarta by the consultant and lent to the workshop for use. The owner received training on the job and advise on how to use the plastic welding press.

SENTOSA had also proven very reliable in the past and had delivered good quality work at realistic price. A sample filling port casted from aluminium was produced (apart from frame work for a power pump). The workshop is generally good equipped with machinery like lathe machines, drill press, hack saw machine, hand tools a. s. o. Further, there is substantial and long experience in casting aluminium and brass parts. Metal casting is performed daily and furnaces and other needed equipment are in place.
The workshop is also able to produce additional parts required for the BPPs, like hand sliding pump, filling port and hose connectors. Therefore, concentrating production of a number of parts at one workshop reduces the need for coordination work and the number of manufacturers involved.

NAGOJA got not chosen for hand sliding pump and filling port work, because of insufficient equipment, a certain degree of unreliability in keeping time limits and asking for high production prices of parts.

BIRO TEHNIK WAHAB was not selected for hand sliding pump production because of overstated prices and to high profit expectations. But the workshop could be reconsidered again in case of need for an additional hand sliding pump manufacturer.

Following are the addresses of the two selected workshops for backpack pump production:

-Bengkel Cor Logam "SENTOSA", Jl. Jaya 5, No.18 Rw.VII, 16 Ulu, Palembang
Tel: 0711/515625

-RAPIH UTAMA, Simpang Tiga Tanah Tinggi No. 168, Palembang
Tel: 0711/711528

Another source for backpack pump tanks could be *TOKO BORDIR TAMASYAH (Owner H. Imron) Pasar Cinde Lantai II No. 42. HP. 081367653137.*

2.3 Bring workshops to a self-running, sustainable and independent production level for selected equipment

Industrial extension experience in Indonesia has shown, that it is often easier for a company or workshop to produce a single piece of equipment than going into mass production with a continuous high product quality.

To bring the workshops to a self-running independent production of the back pack pumps a number of support measures and activities were undertaken during the assignment.

The list below presents activities and measures undertaken by the consultant together with the workshops:

- Search for sources of raw materials and parts on national and international level

- Purchase of some key materials like brass pipes, stainless steel valve balls, and stainless coil spring for valves, rubber rings and seals, etc.

- Search for plastic welding equipment, purchase of one unit

- Hand over the information to the workshop owners, where and how to get the materials
- Introduce and give purchased sample materials and equipment to workshops for use
- Materials and equipment were not handed over for free; a refund was requested by the project
- Introduction and guidance on making of jigs and fixtures for mass production
- Provision of recommendations about improvements and changes at production processes
- Support and instructions on making special tools
- Demonstrations and on the job advise on how to do specific and difficult production steps
- Frequent visits at the workshops to guide the production process and to intervene in case of problems
- Making of technical drawings about the equipment and hand over to the workshops
- Explanation of drawings to workshop owners and workers
- Discussion of changes and improvements during production start and during mass production
- Linkage of workshops for joint production, linkage to shops and dealers

These activities mentioned above supported the installation of a self running independent production among the selected workshops. Future follow up visits from time to time at the workshops are important to give support if problems arise and to keep an eye on the quality of the product. Products not functioning as expected should be returned for improvement and the reasons for rejection explained.

Usually workshops are not used working together as needed in the case of the back pack pump. A certain co ordination work was/is necessary at the beginning to bring them together. It should also be made clear to all involved parties that participating workshops will profit from the joint work.

2.4 Search for other local available equipment to reduce the present dependence on imported expensive equipment and parts

Materials and equipment for back pack pumps and flexible tanks 2000 liter:

The local production of back pack pumps in South Sumatra is now established with the use of mainly local available materials. After an intensive search in Jakarta, the purchase of plastic welding equipment was possible at a reasonable price. The use of two layer reinforced PVC tarpaulin for the back pack pumps (BPPs) flexible water

tank presents a intermediate solution as thicker PVC tarpaulin with about 0.8 – 1mm thickness is at present not available at the Indonesian market.
This thicker material will also be needed for the production of flexible 2000 liter tanks (Fol-Da tank sample). Discussions with dealers in Jakarta showed that this type of PVC tarpaulin must be ordered from overseas.

For the local production of the 2000 liter tanks other more sophisticated plastic welding equipment is also need. There is the change to produce such a plastic press locally with some of the components purchased in Jakarta.

The following shop could order suitable tarpaulin from Korea but only on large quantity.
(Toko Terpal SUKSES, Jl. Cengkeh No.17, Jakarta Kota, Tel. 6900202, Fax: 6909068).

Another possible source could be the German company mentioned below.
(VERSEIDAG-INDUTEX GmbH, Industriestrasse 56, D-47803 Krefeld Germany, Tel: 0049 2151 876 223)

The plastic welding press was purchased at the following shop in Jakarta. The trader can provide spare parts as well.
(REACH Element, Glodok Makmur 28B, Jl. Hayam Wuruk, Jakarta 11180, Tel.: 6395025, Fax: 6247882)

Brass pipes are supplied by:
(PT.SUSTEC Indonesia, Pergudangan Komasi Permai Blok E-2, Jl Perancis, Dadap, Tangerang 15211, Fax: 021- 5592201).

Power pumps:

The search for power pumps continued, in particular for available models in the local market. Two pumps were purchased and tested among others at the project premise (ONGA pump and DAVEY pump). The pumps can be sourced at the local market. Prices for these pumps are quite low and reasonable when compared to imported pumps.
(A source in Palembang is: *Toko Sumber Motor, Jl. Jend. Sudirman No. 21CD)*

For comparing, testing and demonstration the project had purchased two units of WICK 375 pump sets. These pumps are specially made for (forest) fire fighting in difficult terrain. They are produced in Canada and are rather expensive. Nevertheless the pump test executed by the consultant and project staff had shown that this type of pump shows still the best performance. However at a price above 4000 US Dollars, the majority of Indonesian user types cannot afford such a pump in larger numbers.

Hence, to search for alternatives and for cost reduction the consultant was asked to test a number of other pumps for suitability and to look into the possibility for local production of a Wick type pump. A local available engine was purchased and was fixed into a holding frame by a local workshop. Then the engine was connected with one of the WICK 375 pump heads imported from Canada. In this case there would only be the need for importing the pump head, and as such to reduce the price for one pump set considerably.

The pump set showed a promising performance during the test. However a major problem presents the lower speed of the used local HONDA engine (3600RPM)

compared to the originally used SOLO engine (6500RPM). With the lower speed, the maximum performance of the WICK 375 pump head can't be fully exploited.

In order to get a similar type of pump head produced in Indonesia, several institutions and companies were contacted. Most of the contacted companies declared they are not able to produce such a pump or not interested to start a production.

One company near Bandung got a sample of a pump head for evaluation. A final decision of the company is still outstanding.
(Edi Permadi, Cihanjuang Inti Teknik, Jl. Cihanjuang 204, CIMAHI 40513, Tel/Fax: 022- 6640814)

In case the pump head could be successfully, locally produced at a much lower price, there is the change for a wider introduction and use in Indonesia. Village and district fire fighter teams as well as plantation fire fighting units could use this type of pump.

For more information see also the report about the power pump test attached at Annexes.

Hand tools:

The materials for the hand tools are all locally available. Like in the case of the fire swatter the design got partly changed to suit these materials. Certain small changes recommended from the field experience were introduced and are applied with the new production for 2005.

2.5 Continue the development of jigs and fixtures for standardizing production and quality assurance, with chosen workshops

During the first assignment in December 2003 the consultant had started to give advice in use of jigs and fixtures, especially for the production of BPPs.
The use of jigs and fixtures makes the production of larger quantities of parts easier, as the shape and size is fixed or kept within a certain range. Additionally, the quality increases and keeps constant during production of a large amount of same products. Another positive effect is the production cost reduction for a larger amount of parts. With the amount of units produced the costs are declining further as costs for jigs and fixtures are distributed over more units (Economy of Scale).

For the BPP filling neck, moulding patterns were made from aluminium. This pattern having a similar shape like the finished parts but are bigger in size. The moulding pattern are bedded in special sand and later removed. The hollow sand mould is then filled up with melted aluminium. After cooling down, the cast aluminium part gets removed from the sand bed. For new parts each time a new sand mould has to be prepared, (lost mould system).

Some of the BPP parts like nipples, hose connectors, nipple covers were cast from brass. Moulding patterns were made from aluminium or from brass. For the nozzles, valve bottoms, nuts and piston valve housings, simple hexagon or round profiles were cast into sand moulds.

Especially during the aluminium casting activities, there were larger quantities of unsuitable parts, because of impurities in the cast. A change of the aluminium composition improved the results.

For casting mainly scrap aluminium from old pistons, motor blocks and cylinder heads is used. When aluminium is reused several times, quality is declining and the amount of impurities in the cast increases. To improve the quality of the cast, the advice was given to use more “virgin scrap aluminium”.

For making the snap ring for the filter socks a special pipe was made. The used stainless wire was winded around the pipe by using a lathe machine. It was difficult to find the right diameter of the pipe, as the wire bends partly back after taking of from the winding pipe.

To cut the different sizes of seals needed, ring shaped knifes were made. Workshop staff was instructed how to make these knifes and how to use them. With an already existing simple spindle press the seals got stamped out of a rubber mat.

The various jigs and fixtures, developed together with the workshop staff, provide a good base for the support of a sustainable independent production of Bops. In case new jigs and fixtures are needed the basic ideas and experience how to make and use jigs and fixtures are already embedded within workshops. Staff and workers are able to design and make new ones for further increase of production efficiency and quality assurance.

2.6 Screen production of hand tools (again) regarding improvements and production processes

Before the first assignment of the expert, the project had already found 2 local workshops producing the hand tools. Frequent orders are placed by the project. The workshops provide the following 3 tools (see Annex for hand tool design and form):

- Fire Rake (Garu Api)
- MacLeod Tool (Cangkul Garu)
- Fire Swatter (Kepyok Pemukul)

The tools are made from locally available materials and are adapted to the conditions in South Sumatra. Among some other items, the project keeps these hand tools on stock for provision to local communities.

It was observed that the quality and the size of used materials varied. The two workshops were using materials with different sizes. To get more uniform deliveries, additional production instructions were set up. For the Fire Rake and the MacLeod Tool production drawings did not exist. Therefore drawings were made, given and introduced to the workshops.

Additional visits were made to the two workshops to instruct about the changes and improvements recommended by stakeholders and SSFFMP. During these visits demonstrations were given on improvements like welding, bending and blade grinding at Fire Rake and MacLoud Tool. Changes at the Fire Swatter were also demonstrated and documented on a drawing.

3. SUMMARY OF ACHIEVEMENTS AS PER TERMS OF REFERENCE (Consultant's main tasks)

- Activities initiated during the first assignment were continued. The mass production of backpack pumps (BPPs) was started with two workshops as a joint production work. Work on power pumps continued, more pump samples were purchased and tested at the project's premise. The search for suitable production materials and equipment continued on national and international level. The hand tool production received further attention and additional inputs were given on production methods, materials. New and complimentary drawings were handed out and explained.

- Workshops for BPP mass production were finally selected at the beginning of the assignment. The two workshops selected got intensive support by frequent extension visits, supply of sample materials, and hands on advice on how to produce certain parts. They received drawings and instructions, addresses of suppliers and other support. The hand tool producers got also intense support and frequent visits for improvements on product and quality.

- Work on power pumps continued. Additionally, local available pumps were purchased and tested together with imported models under realistic conditions at the project. The search is ongoing for a manufacturer in Indonesia capable of producing high pressure, light weight pump heads.

- The search for local available equipment focused on power pumps and on equipment for plastic welding, apart from other needed raw materials for production. Two locally available power pumps got purchased. As another possible solution, one pump model was designed and manufactured, using a local available engine and frame, and an imported pump head.

- Search for locally available raw materials also continued. Almost all materials needed for BPP production are now purchased locally. Difficulties still exists with supply of stainless steel balls for the hand sliding pumps. These are still ordered from Singapore. The locally available PVC tarpaulin use for the BPP tank presents an intermediate solution. The search still continues for a supplier of thicker material. This thicker tarpaulin will be also needed for the local production of collapsible water tanks (2000l).

- Jigs and fixtures were made together with workshop staff, especially for the production of BPPs. Workshop staff got experience how to make such supporting devices and got also the idea how to improve and how to make new ones. They are now aware, that the use of jigs and fixtures strongly contributes to high quality production and quality assurance.

- Workshops producing hand tools received more advice on production processes and technologies to improve quality and to uniform shape and design. Hands on advice was given to workers and owners during several visits. Changes and improvements were discussed and additional drawings were prepared and handed over.

4. RECOMMENDATIONS

The local mass production of BPPs and hand tools is now established and will continue. The quality of the products is appropriate, satisfying and suitable for the conditions in South Sumatra.
To make sure the quality is not slipping down, from time to time quality and function of the supplied BPPs and hand tools should be checked. Extension experience with Indonesian workshops show the tendency to move to cheaper raw materials and parts. Workshop owners often think this will reduce production costs and increase their profits. In reality it results usually in a lower product performance and quality.

Following are some major recommendations how SSFFMP should continue with the industrial extension activities and what to consider with regard to decide on priority fire fighting equipment:

Backpack pumps

- As the production of BPPs is now established, it is necessary to keep an eye on quality and function.
  Reject not satisfying quality. Inform the workshops about what should be changed or improved.

- Continue the search for the thick reinforced PVC tarpaulin. The manufacturers should also keep an eye open to find such material.

- When training is given on BPP use in the field, advice the fire fighter teams to empty the tank complete after use, open the cover and hose connector cap for drying inside.

- Provide the information about the availability of BPPs in South Sumatra also to other potential users like village and district fire fighting units, plantation companies, dealers and others. The additional demand will sustain further production of BPPs in South Sumatra.

Collapsible water tank

- The collapsible water tank proved to be suitable equipment during the power pump test at the project. Two sample tanks from USA were procured by the project for test and distribution.

- For the local production of the tank, certain conditions and precautions have to be fulfilled. First, a source for the heavy PVC tarpaulin has to be found with a safe supply. Second, the special plastic welding equipment should be purchased by the project or locally produced with components available in Jakarta. A local workshop will not invest for such equipment at the beginning.

- After sourcing the tarpaulin for the collapsible water tank, one workshop should try to make a sample tank. Then, the tank needs to get tested. RAPIH UTAMA could do the sample tank, as the workshop is also doing the back-pack pump's tank.

Portable pumps (Power pumps)

The pump tests showed that the imported WICK 375 or WILDFIRE Mark 3 pumps are still the best performers for forest and land fire fighting. But the other tested pumps, specially the DAVEY pump showed also promising performance. For vast distribution and use in forest and land fire fighting, the imported WICK and WILDFIRE pumps are too expensive. Additional to mention is the more subtle operation and the need for higher maintenance level. Experienced maintenance and repair facilities do not exist in Indonesia the same is true for an organised and continuous spare part supply.

The alternative using imported pump heads, new or reconditioned and local available engines presents still another solution for the power pump problem. But as experienced in the pump test, fast running engines should be used to exploit the full performance of the pump heads.
If the manufacturer near Bandung is able to produce suitable pump heads, similar to the imported ones, there are good reasons to go for this solution.

The local available pumps sets (ONGA and DAVEY) should be seen as the most preferable solution. Even the performance is only about half of the WICK 375 pump set. A final field test under real fire condition should show the suitability. Another positive point is the price of such a pump set and widely available components. E.g. what counts is the price: one pump is available for only one/tenth of the price compared to the imported WICK or WILDFIRE pumps.

Hand tools

The supply of the hand tools is now considerable safe with an acceptable quality provided by the two suppliers. As already earlier mentioned the delivered quality needs a check from time to time to prevent a quality reduction by the use of sub standard materials.

The two manufacturers got all the information and instruction for a further good quality. Additional drawings are prepared and handed over.

5. Final Remarks

The two months industrial extension activities were carried out during the time period May till August 2004. Good results were achieved. The local supply of backpack pumps was established with two workshops. A large amount of pumps got meanwhile produced for distribution by the project.

The production of hand tools is also smoothly organized and well functioning.

Work on production preparation for flexible water tanks (2000l) should continue. Some obstacles, like the supply of thick tarpaulin and the plastic welding technology needs to be addressed and solved.

The work on power pumps should continue. The purchased pump samples should undergo a real field test to underlay the results gathered at the first pump tests and the given recommendations.

If SSFFMP likes to continue in establishing local capacities for production of fire fighting equipment, further support and industrial extension to the small scale industries is required for a longer time period. Experience in the past has shown

that good results were achieved by other projects having medium to long-term industrial extension programmes.

6. ANNEXES

6.1 Test of power pumps for forest firefighting

Background

For forest fire fighting, motor driven power pumps are used in many countries prune to this kind of disaster. There are various models on market with wide variations on price and performance.
Pumps for forest fire fighting have some specific features compared to pumps used for fighting structure fires.

Some of the specific features are:

-The pumps should be light weight and if possible to carry by one or maximum two persons over a longer distance and in difficult terrain
-Should deliver a high pressure for the use of long hose lay outs and when water is pumped up hill or up mountain to compensate pressure loss
-Easy and fast to set up in case of fire
-Should be reliable, easy to operate and to maintain
-Prime movers are usually petrol engines, often two stroke engines with their higher ratio of power to weight
-The price of pumps should be affordable especially in developing countries like Indonesia

One of the activities of the South Sumatra Forest Fire Management Project (SSFFMP) is also the provision of equipment for forest fire fighting to village fire fighter teams and district fire fighting centres. Apart from hand tools some power pumps should be also provided.
Therefore the project is searching for types of pumps incorporating some of the specific features mentioned above and at an affordable price for the project as well as for village crews, district centres, plantations and others with forest fire problems.

The project was purchasing different types of pumps, locally available and imported ones. The pump test should show about what type of pump could be recommend for South Sumatran conditions considering price, performance, handling, maintenance, spare part supply and availability of repair facilities.

Aim and objectives of the pump test

The test should aim on the following objectives:
-deliver reliable figures for the comparison of the different types of pump sets
-check and compare the extracted performance data with the data provided by the manufactures
-provides information for the selection of pumps suitable for South Sumatran conditions
-give guidance to project staff for further work on power pumps

Test methods, procedures and equipment used

The test set up was kept rather simple as the idea was not to do a sophisticated scientific test trial. As mentioned in the aims and objectives the test should deliver comparable data for selection and comparison of the different pumps.

Following test set up was used:
I. Water source: 2000l flexible tank Fol-Da brand

II. Suction hose dia 2", 3m long with a strainer and a bottom valve (all Wick). The suction hose was put over the tank wall into the tank. The strainer touched the ground.

III. The pumps were connected to the suction hose and standing at the concrete floor. Static suction head was during all tests positive, between 0.1 – 0.3m. This means the water level in the tank was higher than the pump intake.

IV. At the pump discharge one pressure gauge (25 bars) was fixed to measure the pressure right at the pump.

V. After the pump and the pressure gauge the hose layout followed. The hose had a diameter of 1 ½". Threaded couplings were used. Two hose layouts were mainly used, 150m and 30m length, one hose section measured 30m length. The hose were equally laid out at the ground and the deliver height was only 0.8m into the test vessel.

VI. At the hose end a second pressure gauge (25 bars) was fixed to measure the pressure loss in the hose compared to the pressure at the pump's discharge.

VII. At the hose end after the pressure gauge an adjustable nozzle Fog/Straight beam (Wick) was used. The positions of the turn able nozzle are as following: closed position, straight beam and spray. Four positions were marked at the nozzle for the test. Each position on a 90 degree turn to the left.
For each pump 5 tests were carried out, at the last one the nozzle was remove for free flow test.
The chart below shows the different nozzle positions:

Pos. 0:	Close 0 degr
Pos. 1:	Straight beam 90 degr
Pos. 2:	Bigger, straight beam 180 degr
Pos. 3:	Spray beam 270 degr
Pos. 4:	Nozzle removed, free flow

VIII. Test vessel to collect the water coming out of the nozzle or hose end. The vessel had marks for reading the amount of water pumped in during a measured time period.

IX. A stop watch to measure the time period when the water was pumped into the test vessel.

For each pump, 5 tests were carried out with the varying nozzle positions as mentioned under VII. in this chapter.

The Wick 375 pump was tested with a hose layout of 150/120 m while the ONGA and the DAVEY pump were tested with 150m and 30 hose length to get comparable figures about the pressure losses over the hose length.

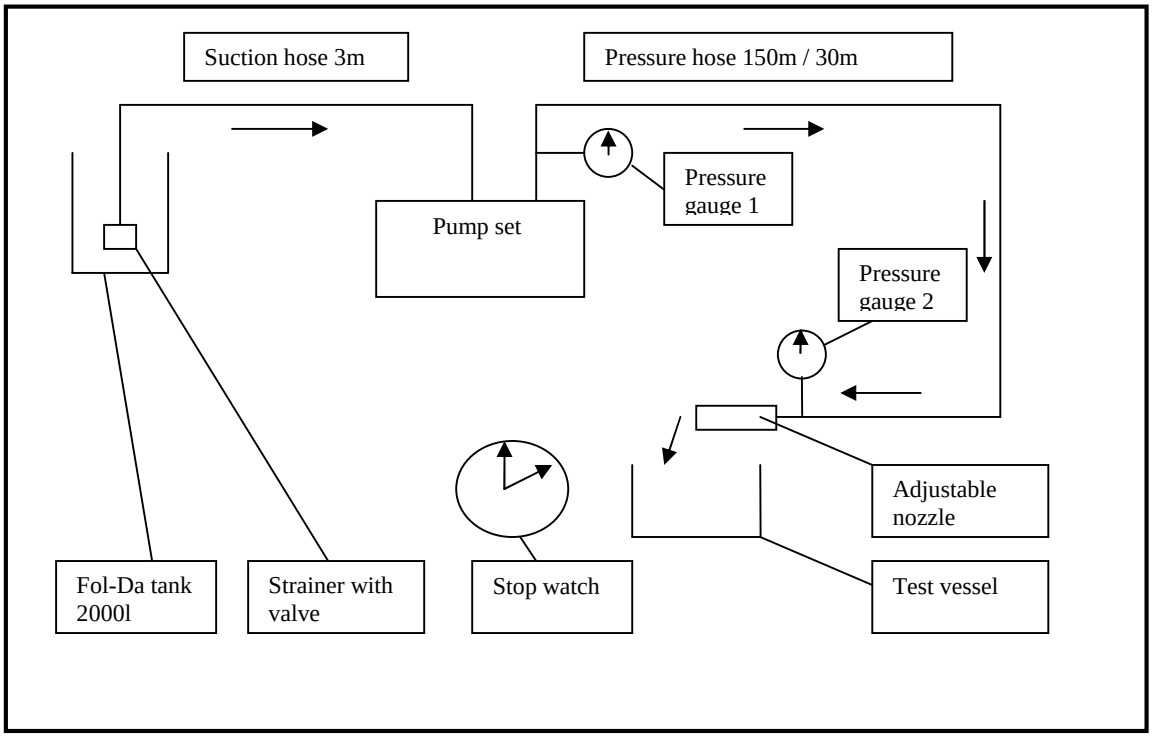

Figure: Set up for power pump test at SSFFMP

Data and features of the pumps tested

Features of Pump	ONGA Pump	DAVEY pump	WICK 375 Solo engine	WICK 375 Honda engine
Type of pump	One stage centrifugal 1 impeller	Two stage centrifugal 2 impellers	Four stage centrifugal 4 impellers	Four stage centrifugal 4 impellers
Pump casing/ impellers	Aluminium	Aluminium	Aluminium	Aluminium
Type of engine	Four stroke Robin EH- 17 2D, Petrol 6.0 HP at 4000 RPM	Four stroke Honda GX 200, Petrol, 6.5 HP at 3600 RPM	Two stroke Solo 10 HP at 6500 RPM, recommended speed about 5000 RPM fuel mix 24 : 1	Four stroke Honda GX 270, Petrol, 9 HP at 3600 RPM, speed increased to about 4000 RPM
Wight of pump with engine	27 kg including protection/ carrying frame	24 kg no protection frame, but handle to carry	25 kg including base frame but without fuel tank	46 kg including protection/ carrying frame
Type of priming	Self priming but water filling of pump, valve inside suction inlet	Self priming but water filling of pump, valve inside suction inlet	Priming by additional hand pump, bottom valve at suction hose needed	Priming by additional hand pump, bottom valve at suction hose needed
Suction side	One 2” inlet	One 1 ½” inlet	One 2” inlet	One 2” inlet
Delivery side	Two 2”, two 1” outlet	One 1 1/2”, two 1”outlet	One 1 ½” outlet	One 1 ½” outlet
Price Pump head plus engine	355.- Euro including frame	670.-Euro	4050.- Euro	Pump 2970.- Euro Engine 410.- Euro Frame 150.- Euro

Test data and graphs from the pump test

Power pump test for SSFFMP Executed by: G. Hitzler and staff SSFFMP	Date: 13.08.04 9.00 HR	Location: SSFFMP	Temperature: 28 C
Type of pump: ONGA one stage centrifugal impeller	Power source: ROBIN 6HP fours stroke petrol	Engine speed: 4000 RPM	
Static suction head: + 0.1m	Delivery height: 0.8m	Hose length and width: 150m / 30m 1 1/2”	Nozzle: Wick adjustable: close, direct beam, bigger direct beam, spray
Description of test procedures: Fol-Da Water tank – Pump set with pressure gauge – 150m/30m hose – At hose end pressure gauge and adjustable nozzle – Test vessel – Stop watch			

Delivery test	Test 1		Test 2		Test 3		Test 4		Test 5	
Hose length: m Nozzle position: Engine speed: RPM	150 Closed 4000	30 Closed 4000	150 1 4000	30 1 4000	150 2 4000	30 2 4000	150 3 4000	30 3 4000	150 open hose	30 open hose
Test vessel: litres Time measured: sec **Delivery:** litres/ min			30 / 28 22 / 20 82 / 84	28 / 36 18 / 28 94 / 77	30 / 33 13 / 15 139/132	35 / 30 13 / 10 162/180	36 / 30 15 / 10 144/180	34 / 30 15 / 12 136/150	40 / 40 10 / 10 240/240	36 / 38 8.5 / 8.0 254/285
Pressure at pump: bars Pressure at hose end:	6.3 6.3	6.8 6.8	5.8 / 5.8 5.3 / 5.3	5.5 / 5.1 5.5 / 5.0	5.1 / 5.0 3.5 / 3.5	4.3 / 4.4 4.2 / 4.2	5.0 / 5.0 3.2 / 3.2	4.3 / 4.2 4.1 / 4.1	4.0 / 3.8 0.0 / 0.0	1.7 / 1.7 0.0 / 0.0

Observations: Pump is easy to start and operate. For handling and protection a frame is add it. The pressure is rather low but meets the manufacturer’s specifications.

Power pump test for SSFFMP Executed by: G. Hitzler and staff SSFFMP	Date: 13.08.04 11.00 HR	Location: SSFFMP	Temperature: 30 C
Type of pump: DAVEY two stage centrifugal impeller	Power source: Honda GX 200 6.5HP fours stroke petrol	Engine speed: 3600 RPM	
Static suction head: + 0.1m	Delivery height: 0.8m	Hose length and width: 150m / 30m 1 1/2”	Nozzle: Wick adjustable: close, direct beam, bigger direct beam, spray
Description of test procedures: Fol-Da water tank – Pump set with pressure gauge – 150m / 30m hose – At hose end pressure gauge and adjustable nozzle – Test vessel – Stop watch			

Delivery test	Test 1		Test 2		Test 3		Test 4		Test 5	
Hose length: m Nozzle position: Engine speed: RPM	150 Closed 3600	30 Closed 3600	150 1 3600	30 1 3600	150 2 3600	30 2 3600	150 3 3600	30 3 3600	150 open hose	30 open hose
Test vessel: litres Time measured: sec **Delivery:** litres/ min			26 / 26 14 / 15 98 / 104	46 / 35 24 / 20 115/105	28 / 27 9 / 13 187/125	51 / 56 15 / 17 204/197	31 / 37 9 / 10 207/222	58 / 53 17 / 16 205/199	40 / 35 14 / 10 171/210	40 / 39 9 / 9 267/260
Pressure at pump: bars Pressure at hose end:	8.9 / 9.0 8.8 / 9.0	8.8 / 8.9 8.8 / 8.9	7.0 / 7.0 6.5 / 6.4	7.0 / 7.0 6.7 / 6.8	4.8 / 4.9 3.4 / 3.3	4.2 / 4.2 4.1 / 4.0	4.8 / 4.7 3.2 / 3.0	4.0 / 4.0 3.9 / 3.9	2.8 0.0	0.2 0.0

Power pump test for SSFFMP Executed by: G.Hitzler and staff SSFFMP	Date: 13.08.04 14.30 HR	Location: SSFFMP	Temperature: 29 C
Type of pump: Wick- 375 Four stage, centrifugal impeller	Power source: Solo 10 HP two stroke engine; fuel mix	Engine speed: About 5000RPM during test, max. speed about 6500 RPM	
Static suction head: + 0.1m	Delivery height: 0.8m	Hose length and width: 150m /120m 1 1/2”	Nozzle: Wick adjustable: close, direct beam, bigger direct beam, spray
Description of test procedures: Fol-Da water tank – Pump set with pressure gauge – 150/120m hose – At hose end pressure gauge and adjustable nozzle – Test vessel – Stop watch			

Delivery test	Test 1		Test 2		Test 3		Test 4		Test 5	
Hose length: m Nozzle position: Engine speed: RPM	150 Closed 5000	150 Closed 6500	120 1 5000		120 2 5000		120 3 5000		150 open hose 5000	
Test vessel: litres Time measured: sec **Delivery:** litres/ min.			61 / 43 21 / 15 174/172		60 / 65 17 / 17 212/229		62 / 60 17 / 16 219/225		n.m.	
Pressure at pump: bars Pressure at hose end:	22.5 22.5	26.0 26.0	14.5/14.5 12.5/13.3		7.0 / 7.0 5.0 / 5.5		6.7 / 6.5 5.0 / 4.8		1.8 0.0	

Observations: The test was executed with a recommended lowered speed (Manufacturer’s recommendation) at about 5000 RPM. The max pressure was 26 bars at full speed. One of the hoses burst and the test was continued with only 120m hose. The start of the Solo two stroke engine is not so easy compared with 4 stroke engines. Further the engine develops much more noise even with muffler compared to the four stroke ones. The position of the fuel line coupling at the base frame should be changed as somebody could step on it and break it easily. A proper carrying frame should be also added for protection and better handling.

Power pump test for SSFFMP Executed by: G. Hitzler and staff SSFFMP	Date: 11.08.04 14.30 HR	Location: SSFFMP	Temperature: 29 C
Type of pump: Wick- 375 Four stage centrifugal impeller	Power source: Honda GX 270, 9 HP	Engine speed: 3600 RPM increased to about 4000 RPM	
Static suction head: + 0.1m	Delivery height: 0.8m	Hose length and width: 150m 1 1/2”	Nozzle: Wick adjustable: close, direct beam, bigger direct beam, spray
Description of test procedures: Fol-Da water tank – Pump set with pressure gauge – 150m hose – At hose end pressure gauge and adjustable nozzle – Test vessel – Stop watch			

Delivery test	Test 1		Test 2		Test 3		Test 4		Test 5	
Hose length: m Nozzle position: Engine speed: RPM	150 Closed 4000		150 1 4000		150 2 4000		150 3 4000		150 open hose 4000	
Test vessel: litres Time measured: sec **Delivery:** litres/min.			30 / 32 15 / 15 120/128		55 / 46 17 / 15 194/184		58 / 48 20 / 16 174/180		55 / 40 18 / 10 183/240	
Pressure at pump: bars Pressure at hose end:	10.7 10.5		9.2 8.2		4.0 / 5.0 2.5 / 2.5		5.0 / 5.0 4.0 / 4.0		2.0 0.0	

Observations: The power of the engine is not fully used by the pump as the engine full speed is to low. A transmission may be needed to increase the speed of the pump to about 6000 RPM similar to the Ultra- Striker pump set up from Wildfire.

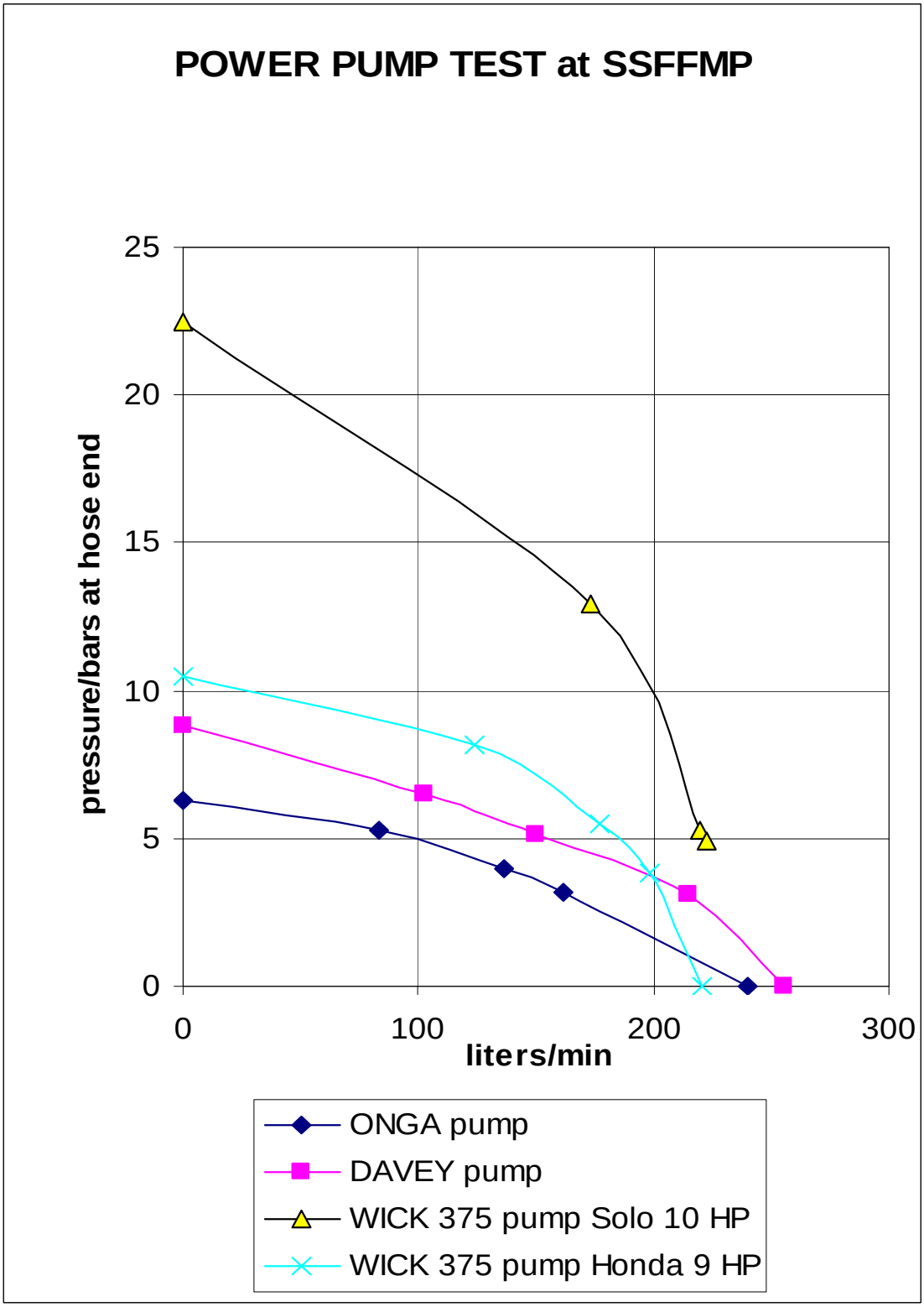

The figure above shows the performance of the different types of pump sets tested with 150m hose length.

Discussion of the results

ONGA Pump

The pump is light weight (27 kg) and easy to carry even in difficult terrain. A provided protection frame makes the carrying and handling easier.
The engine starts easy and no problems regarding the pump and the engine arouse during the test. The pump is self priming but needs water filling beforehand. A pressure of about 6.5 bars could be reached at closed nozzle. The water delivery at 150m hose length is about 83l/min at position 1 of the nozzle and 5.3 bars at the nozzle pressure gauge.
In all, the performance is better than a similar size irrigation pump because of the reached higher pressure, the light weight design and the handling.

DAVEY Pump

This type of pump is also a light weight design (23 kg) and therefore also easy to carry in difficult terrain. A protection frame is not provided but a carrying handle fixed atop. The pump is a two stage impeller design, and therefore providing a higher pressure.
The Honda engine starts easy. The pump is also self priming but needs water filling beforehand.

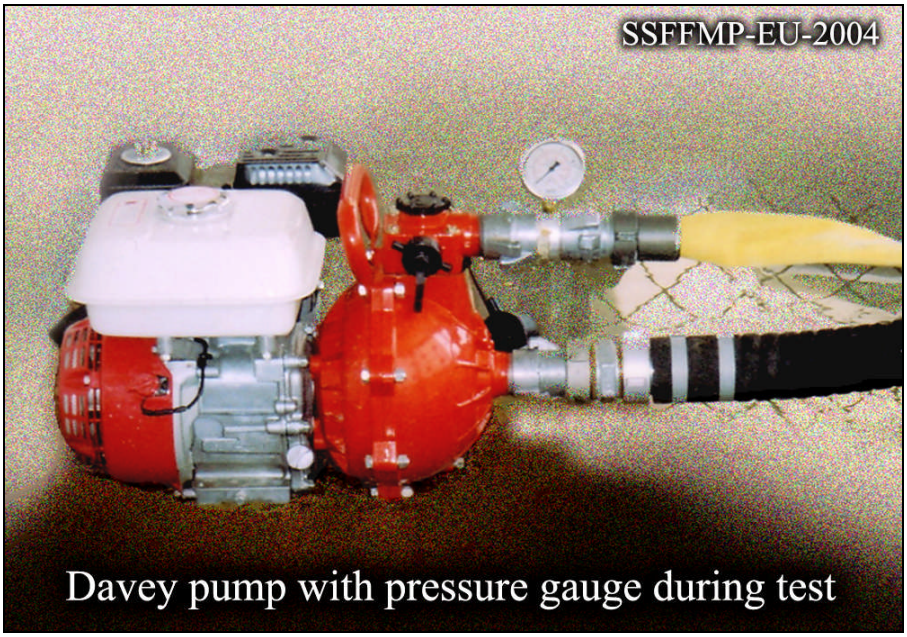

Davey pump with pressure gauge during test

During the test a maximum pressure of about 9 bars was reached at closed nozzle position. The water delivery with 150m hose length was about 100l/min at a pressure reading of 6.5 bars at the nozzle gauge and position 1. This is about 1.3 bars higher compared with the ONGA pump.

Usually long hose lay outs are necessary to reach the fire and still have some remaining pressure at the nozzle for water throwing.

Because of the higher pressure compared with the ONGA pump, the DAVEY pump looks more suitable for forest fire fighting. But for the conditions in South Sumatra a protection/carrying frame is recommended.

WICK 375 pump with SOLO 10 HP two stroke engine (5000 RPM)

This type of pump is specially made for forest fire fighting. The pump set weights also only 25kg without the fuel tank. The fuel tank is separate to carry and contains about 25l fuel mix 24 : 1. The tank gets connected with the engine via a quick coupling hose. The tank has also a filling level indicator.
For carrying the set, a handle is fixed at top of the engine and a base frame below made from light weight pipe for weight reduction. With additional shoulder straps the pump set can be carried on the back by one person. But carrying additionally a full fuel tank will be too heavy for one person, so two are always needed for transportation in the field.
For use in South Sumatra it's recommended to put the pump set into a protection frame similar to the ONGA pump. Pumps are often carried on cars, trucks and ships were damage could easy happen.
The place of the fuel coupling at the engine is inconvenient chosen by the manufacturer. During the start of the engine with the recoil starter one steps easily on the coupling and break it. This could even happen to an experienced operator.

It has to be mentioned that the two stroke engine is not so easy to start than the 4 stroke ones. It needs more experience and more power to get the engine alive. Inexperienced operators will have difficulties as the test has shown. Project staff had difficulties with start and handling of the engine.

The WICK- 375 pump head needs also special care. The pump needs greasing with a grease gun and after use the pump head should be removed from the engine, rinsed, dried and then greased again.

Before starting the engine, the pump and the suction hose must be flooded with water. A separate hand priming pump gets connected to the pump head for lifting the water. If running dry for a short time the pump will get damaged soon. To prevent this damage the engine got equipped with an automatic switch off.

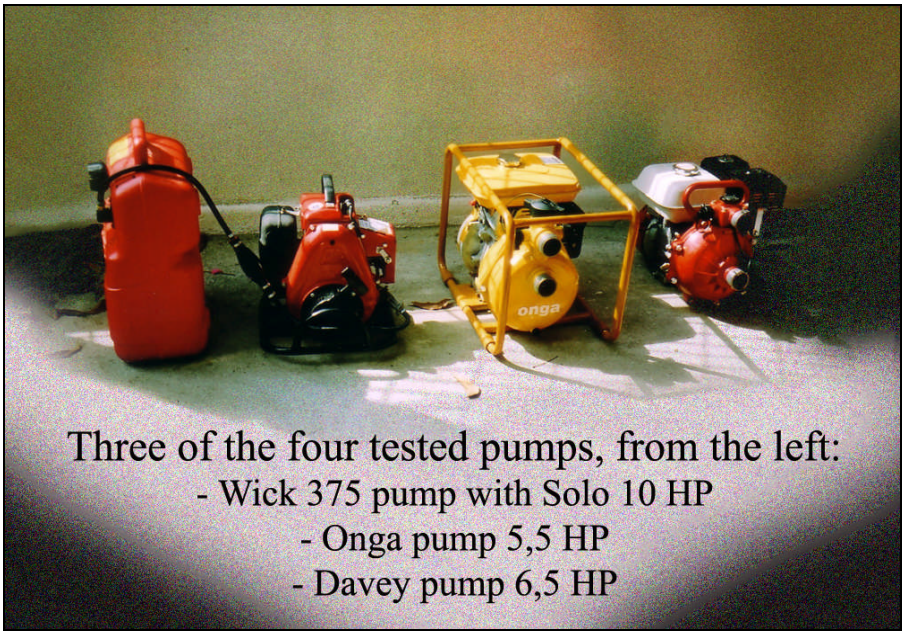

Three of the four tested pumps, from the left:
- Wick 375 pump with Solo 10 HP
- Onga pump 5,5 HP
- Davey pump 6,5 HP

While the other tested pumps used pure petrol engines, the SOLO engine needs fuel mix what will be not always available in emergency situation. There is the change that inexperienced operators will fill in pure gasoline what will damage the engine. Another source of trouble could be the provided fuel mix. It is sometimes diluted with kerosene, what makes the engine start difficult as experienced during test trials at the project.

On the other hand the two stroke engine provides high power at low weight and operates also on a higher speed (5000 – 6500 RPM) compared with 4 stroke engines (3600 – 4000 RPM). The higher engine speed increases additionally the performance of the pump on pressure and delivery.

During the pump test the WICK pump with SOLO engine performed best about pressure and delivery.
The test with closed nozzle showed a high pressure of 22.5 bars at 5000RPM and a maximum pressure of 26bars at 6500RPM.
The test with nozzle position 1 brought a delivery of 173 l/min and a pressure of 13bars at the nozzle pressure gauge. The hose length got reduced from 150m to 120m as one of the hoses burst during the maximum pressure test.

Even by considering the problems mentioned above it can be said that the WICK 375 pump with the SOLO engine is the best performer regarding pressure and delivery.

WICK 375 pump with HONDA GX 270 petrol engine (3600/4000 RPM)

For this test a WICK 375 pump head got connected with HONDA GX 270 petrol engine with 9 HP. Engine and pump head were fixed into a frame for better handling and protection. The whole set weights already 46 kg. This high weight is caused by the much heavier HONDA engine and the stronger protection frame.

The HONDA engine was easy to start after priming pump head and suction hose. The safety shut off, provided with the SOLO engine is missing at this set up, so more care has to be taken to prevent dry running of the pump.
The test with closed nozzle delivered a maximum pressure of 10.5bars at an increased speed of about 4000RPM. The engine is usually adjusted to 3600RPM maximum speed.
At nozzle position 1 pressure was reached of 8.2 bars at the nozzle gauge and a delivery of 125 l/min. The test was only done with 150m hose length.

Because of the significant lower speed of the HONDA engine compared with the SOLO engine only about half the pressure is delivered. With a gear in between the HONDA engine and the pump probably the same performance could be reached as with the SOLO engine (Similar to Striker Pumps at WILDFIRE Catalogue). But there are some negative points to mention about the speed increase. The gear set up will cause additional weight and will increase the costs. More maintenance is also required.

If the WICK 375 pump head is purchased only from overseas, the costs for such a pump set will be not much lower compared to the original set with SOLO engine. The pump head alone costs about 3300 Euro.

Findings and recommendations

The test of the various pumps had shown, that the WICK 375 pump with SOLO engine or the similar WILDFIRE Mark 3 are still the most suitable power pump sets for forest fire fighting.

Positive points to mention are:
-the low weight of one set of only 25kg
-easy to carry by one person in difficult terrain by using shoulder straps
-high pressure and high delivery of water
-suitable for long hose layouts of about 500m and more

Negative points are:
-high cost for one unit, specially till at the user's hand in Indonesia (Dealers commissions, Custom duty, shipment cost)
-no provision of service in Indonesia, spare parts exorbitant expensive and no stock in the country
-difficulties to start the two stroke engine
-use of fuel mix and the problems of supply
-possible breakage of fuel coupling
-operational mistakes and easy damage of pump head and engine

The negative points mentioned above are limiting the wide use of this pump sets in Indonesian forest fire fighting. Communities prune to fires and plantation companies will avoid this high cost investment and not purchase such pump sets. They will go for cheaper alternatives.

One aim of the pump test was to find out whether the alternative available pumps at the local market are suitable. Even with the acceptance of a lower level performance.

A suitable alternative seems the DAVEY pump with its HONDA engine. The pump is available on local market. Spare parts, especially for the engine are easy to get at the shops.
The performance of the pump is only about half of the WICK 375 pump set regarding the pressure but the delivery is not so far behind.
As the terrain in South Sumatra is rather flat, water must not pumped up the hills or mountains during forest fire fighting. Therefore the lower pressure delivery would be acceptable.

The ONGA pump delivers a lower pressure compared to the DAVEY pump, but should be also suitable if the hose layout is not too long and no up hill pumping is necessary.

The combination of WICK 375 pump head and HONDA engine (9HP) showed also its suitability. But because of the lower speed of the four stroke engine, compared with the two stroke one, the possible performance of the pump head is not fully exploited. With a speed increasing gear the unit gets to expensive and also too heavy.

To find out the suitability of the ONGA and the DAVEY pump, a field test should take place, best on a real forest fire fighting situation. The same should happen with the WICK 375 pump with SOLO engine and the WICK 375 pump head with the HONDA 9HP engine.

As the pump sets are often moved by car, truck and boat, all should have a protection frame. Damage often occurs during transportation.

6.2 Quality test for locally produced backpack pumps

Test of Hand pump			
No.	Activity	Important points to consider	Findings, observations
1	Visual examination of hand pump	-Surface polished and smooth, no marks, no cracks at pipe -Burrs and sharp edges removed -Valve head, nipple and nozzle sealed with Teflon tape -Handle not loose at pressed groove	
2	Dry moving test	-Piston easy to move, smooth, no jerky -Rod not rubbing on the nut, no scratch marks -Rod not jammed by plastic bush -Rod straight, not bend, no cracks	
3	Test under water (hose not connected, O-ring and rod are greased) -Piston is pulled, nozzle closed with finger, push piston	-Test of air tightness and function of valves, release of air bubbles -Bottom valve should not release air bubbles -Hose nipple thread and thread bottom valve house should not release air bubbles -At nut no air bubbles should appear	
4	Performance test (Hose connected to pump, tank connecting nipple inserted at hose, clamps fixed) -Hose end with tank nipple in water bucket	-Check speed of sucking up water when pump is operated -Observe shape of water beam, straight beam, not going to side, no spraying -Observe distance of water throw (6-8m) -Force needed to push and pull piston -Suction of water into pump (fast-slow, time lag) -No leakage at: Nozzle thread, guiding nut, bottom valve house, nipples and hose -No dripping of nozzle when pump is held down ward	

Test of flexible tank			
No.	Activity	Important points to consider	Findings, observations
1	Visual check of tank	-General appearance -Welding seams, shape, no overheated or cold spots at seams -Damages from welding -Shoulder straps, shape of sewing seams -Positioning of straps and length -Positioning of adjusters and snap hook	
2	Filling port (Aluminium)	-Positioning of filling port -Rubber seal under nut and inside twist cap -Tightening of ring nut -Wrinkles at tarpaulin around ring nut -Shape and make of filter including snap ring, snap ring seats in groove -Snap ring sharp edges remove -Safety rope for twist cap -Painting of twist cap	
3	Hose connector (Brass)	-Nut tighten sufficient -Rubber seal under washer -Hose nipple with rubber seal and hose clamp -Small twist cap with rubber seal and safety rope	
4	Leakage test of tank (Filling port closed) -Blow in air at hose connector by mouth -Close small twist cap -Put weight on tank about 10kg (stone or iron block)	-Brush the plastic welding seams with soap water and observe air bubbles -Test air tightness of filling port and hose connector, brush soap water there, observe appearance of air bubbles -Observe sinking of weight, general loss of air	

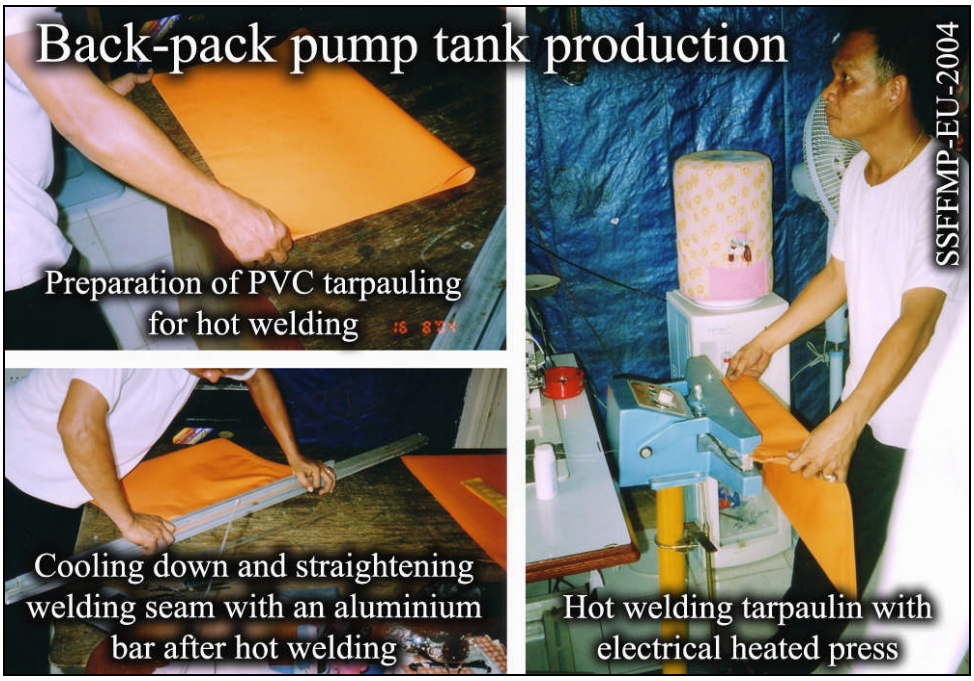

6.3 Production cost calculation for backpack pump

	Back pack pump Costing	27.05.04	G. Hitzler	
I.	**Hand sliding pump**			
No.	Materials	Rupiah/ unit	Total Rp	Notes
1	Brass 1,5 kg	40000,-	60000,-	
2	Hose nipple ¼" x 5/16"	5000,-	5000,-	
3	O – ring rubber d 20	3500,-	3500,-	
4	O – ring rubber d 15	3500,-	3500,-	
5	Valve ball stainless d 9	3000,-	3000,-	Est.
6	Valve ball stainless d 7	2500,-	2500,-	Est.
7	Coil spring stainless d 6,5 x 0,5 x 16	3000,-	3000,-	Est.
8	Sliding bush Toyota car	14000,-	14000,-	
9	Air pressure hose 5/16" 1,3 m	1500,-	1950,-	
10	Hose fasteners 5/16 " 2 pcs	1500,-	3000,-	
11	Coupling + nipple 5/16"	28000,-	28000,-	
	Teflon tape for assembling	1000,-	1000,-	Est.
	Labour costs			
	Making of one pump 10 machine hours + labour costs	30000,-	300000,-	Est. based on WAHAB sample pumps
	Sum: Hand sliding pump		**427950,-**	
II.	**Filling port Aluminium**			
12	Making of port including aluminium	30000,-	30000,-	
13	Making of 2 seals incl. mat.	6500,-	6500,-	
14	Making of filter sack incl. mat.	8000,-	8000,-	
15	Chain for lost prevention incl. bolt and hole at twist cap chain + bolt 2000,-	3000,-	3000,-	
	Sum: Filling port		**47500,-**	

III.	**Flexible water tank**			
16	Tarpaulin 0,5 mm orange 1,2 sqm	20000,-	24000,-	Est.
17	Shoulder straps mat. (belts, cushion, canvas)	20000,-	20000,-	Est.
18	Snap hooks 2	10000,-	20000,-	
19	Straps adjuster	2500,-	5000,-	Est.
20	Plastic reduction outlet 1” x ¾” incl. rubber seal	12500,-	12500,-	
21	Brass reduction outlet ¾” x ¼”	7500,-	7500,-	
	Riveted hole reinforce ring brass 4 pcs.	1000,-	4000,-	Est.
	Glue PVC and hot glue	2000,-	2000,-	Est.
	Labour cost			
	Making of one water tank Working hours including costs for machinery and tools and inserting of filling port 5 hours	20000,-	100000,-	
	Sum: Making of water tank		**195000,-**	
IV.	**Whole Sum:** **Making of one Back pack pump**			
	I. Sum: Hand sliding pump		427950,-	
	II. Sum: Filling port		47500,-	
	III. Sum: Making of water tank		195000,-	
	Whole Sum: **Making of one Back pack pump**		**670450,-**	

6.4 Production drawings backpack pump

Pos. at drwg.	Amount	Unit	Description	Material	Remarks
1	1		Nozzle hexa 19 x 40	Brass hexagon bar 19 mm	
2	1		Handle d 36 x d 33 x 118	Pipe Brass (Copper)	
3	1		Handle washer d 33 x 16	Brass bar round	
4	1		Piston pipe d 16 x d 13 x 395	Pipe brass	
5	1		Piston valve d 18,5 x 21	Brass bar round	
6	1		Ring, valve cover d 9,5 x d 5 x 2	Brass bar round	
7	1		Ball valve d =7 stainless, Alternative d=8 plastic	Stainless Plastic	
8	1		Coil spring d 6,5 x t 0,5 x 20	Stainless/ brass	
8	1		O - Ring piston di 15 x 2,4	Rubber	
9	1		O - Ring seal di 12 x 1,5	Rubber	
10	1		Cylinder pipe d 22 x d 19 x 375	Brass pipe	
11	1		Sliding nut d 25 x 18	Brass bar round	
12	1		Sliding bushing d 21 x 20	Nylon	
13	1		Bottom valve house d 25 x 30	Brass bar round	
14	1		Ball valve d = 9 stainless Alternative d = 8 plastic	Stainless Plastic	
15	1		Nipple (valve seat)	Brass	
	1		Air pressure hose di=8.5 l =1.2m	Plastic, reinforced	
	2		Hose fastener	Chromium	
16	1 set		Tank – Hose connector with washer, nut M 16 x 1.5, cap M16 x 1.5, nipple rubber seals	Brass	Drawing No. BPP 1.2

Part list: Hand sliding pump	Project : Backpack Pump	
SSFFMP PO Box 1229 Palembang 30000	Date and Name: 26.05.04 Gerald Hitzler Changes: 14.08.04	Drawing No.: Belongs to BPP 1.1

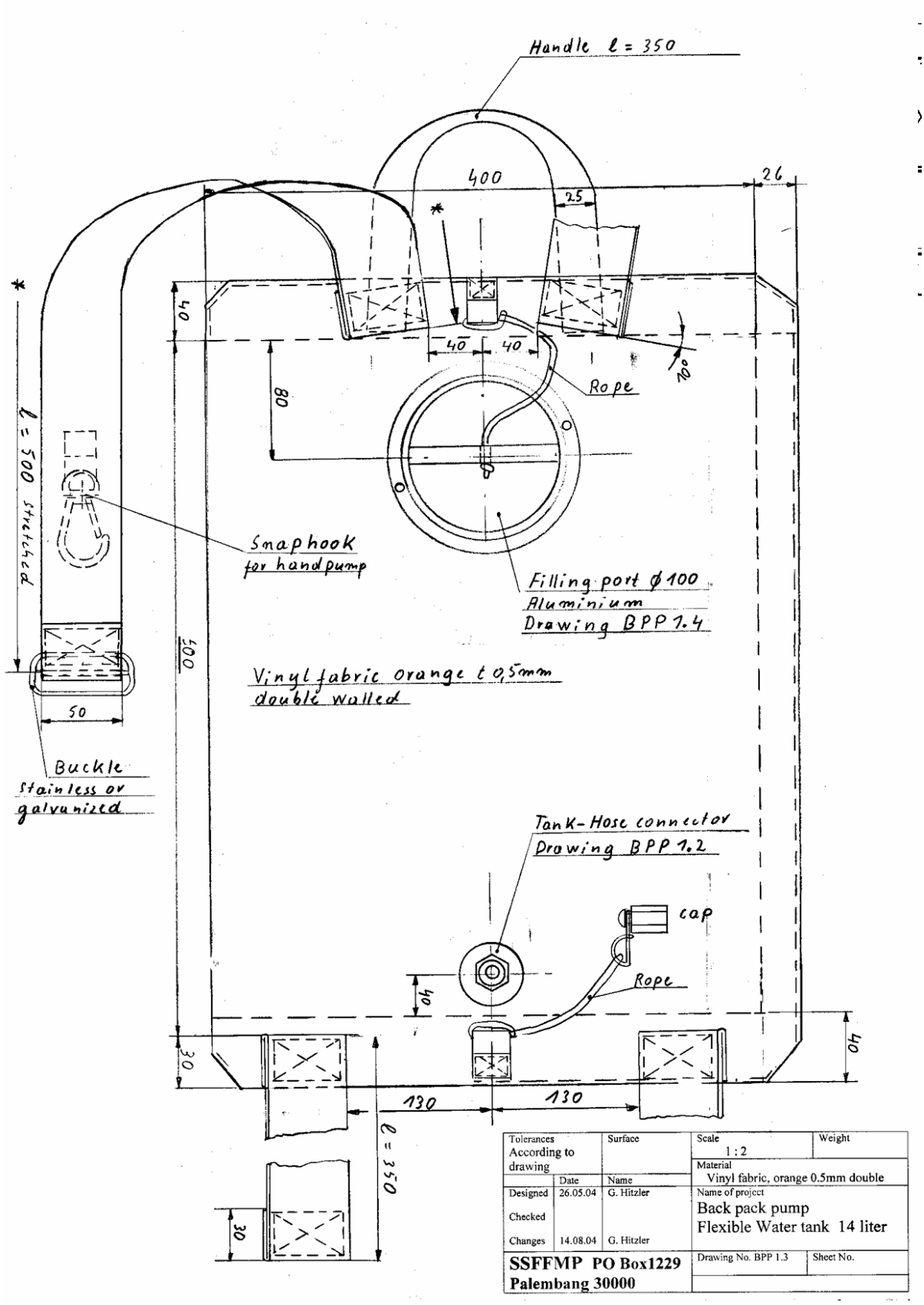
Handle ℓ = 350
400
25
26
*
40
40
40
80
10°
Rope
ℓ = 500 stretched
Snaphook
for handpump
Filling port ϕ 100
Aluminium
Drawing BPP 1.4
500
Vinyl fabric orange t 0,5mm
double walled
50
Buckle
Stainless or
galvanized
Tank-Hose connector
Drawing BPP 1.2
cap
Rope
40
40
30
130
130
ℓ = 350
30
Tolerances
According to drawing
Surface
Scale
1 : 2
Weight
Material
Vinyl fabric, orange 0.5mm double
Date
Name
Designed
26.05.04
G. Hitzler
Checked
Changes
14.08.04
G. Hitzler
Name of project
Back pack pump
Flexible Water tank 14 liter
SSFFMP PO Box1229
Palembang 30000
Drawing No. BPP 1.3
Sheet No.

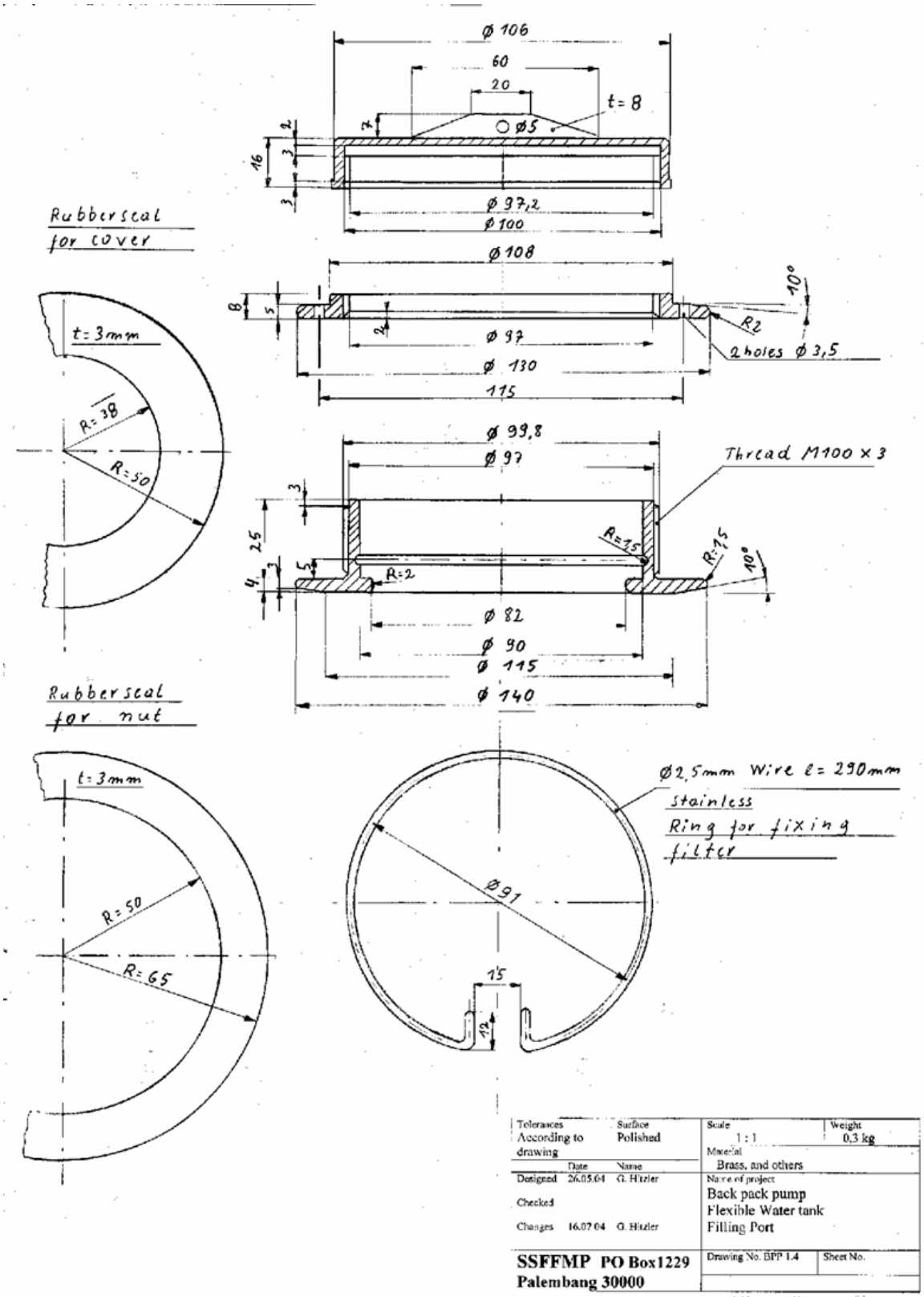
Ø 106
60
20
t = 8
Ø5
Ø 97,2
Ø 100
Rubberseal for cover
Ø 108
10°
R2
2 holes Ø 3,5
Ø 97
Ø 130
115
t = 3mm
R = 38
R = 50
Ø 99,8
Ø 97
Thread M100 x 3
R=1,5
R=2
Ø 82
Ø 90
Ø 115
Ø 140
Rubberseal for nut
Ø2,5mm Wire l = 290mm
Stainless
Ring for fixing filter
Ø91
15
12
R = 50
R = 65
Tolerances According to drawing
Surface Polished
Scale 1 : 1
Weight 0,3 kg
Material Brass, and others
Designed 26.05.04 G. Hützler
Checked
Changes 16.07.04 G. Hützler
Name of project
Back pack pump
Flexible Water tank
Filling Port
SSFFMP PO Box1229
Palembang 30000
Drawing No. BPP 1.4
Sheet No.

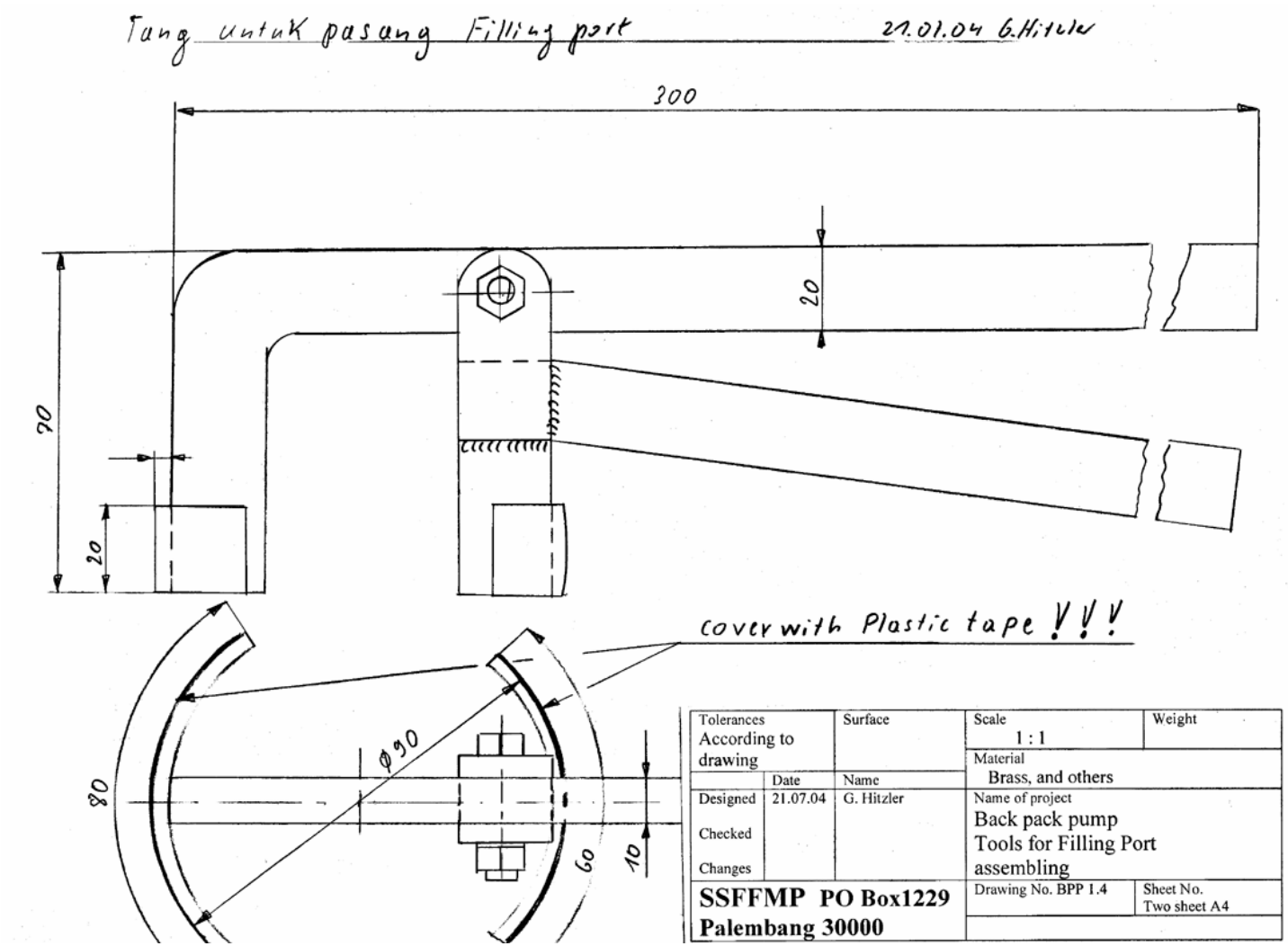
Tang untuk pasang Filling port
21.07.04 G.Hitzler
300
20
70
20
cover with Plastic tape !!!
ø90
80
60
10
Tolerances
According to drawing
Surface
Scale
1 : 1
Weight
Material
Brass, and others
Date
Name
Designed
21.07.04
G. Hitzler
Checked
Changes
Name of project
Back pack pump
Tools for Filling Port
assembling
SSFFMP PO Box1229
Palembang 30000
Drawing No. BPP 1.4
Sheet No.
Two sheet A4

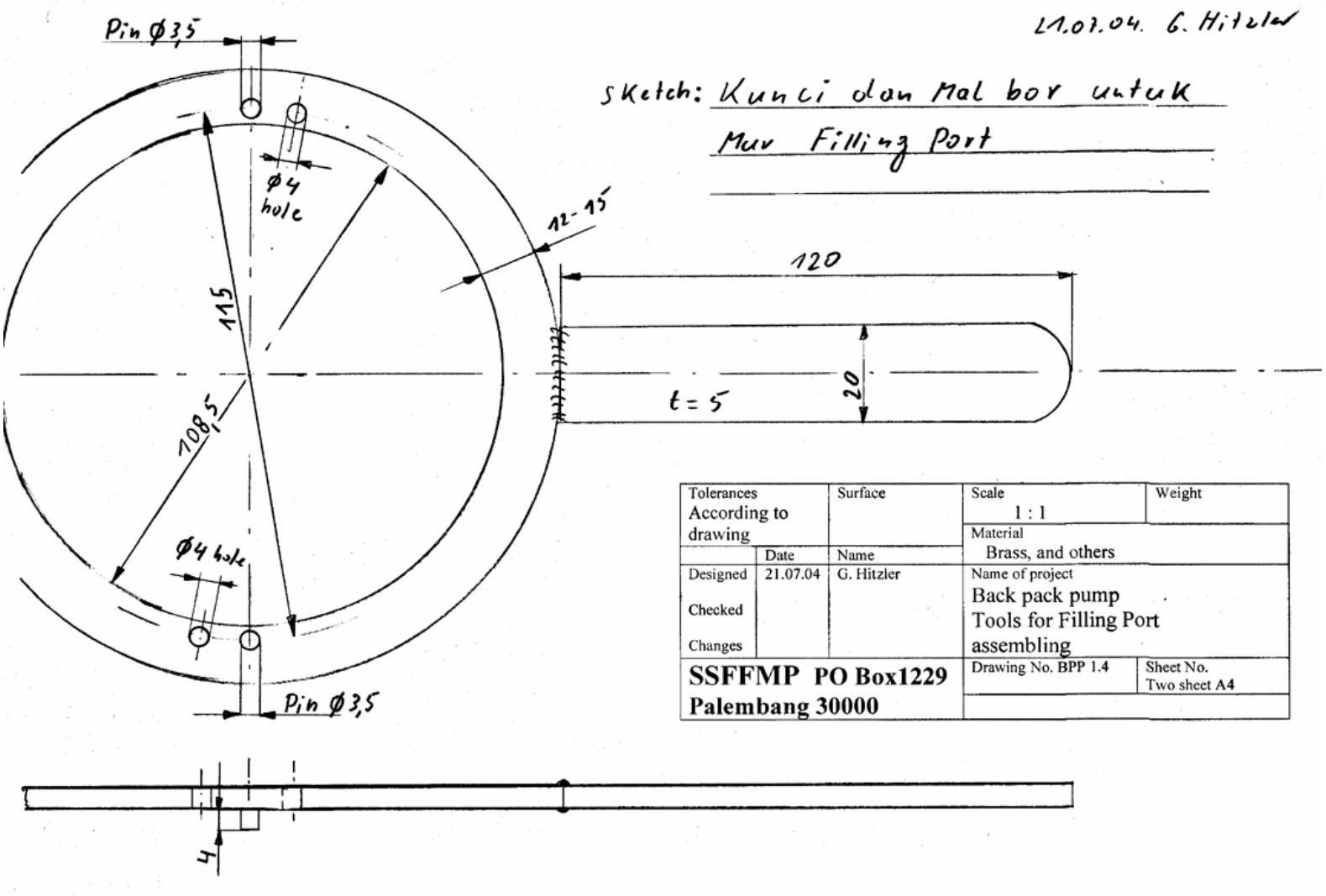
21.07.04. G. Hitzler
Sketch: Kunci dan Mal bor untuk Muv Filling Port
Pin Ø3,5
Ø4 hole
12-15
120
115
108,5
t = 5
20
Ø4 hole
Pin Ø3,5
4
Tolerances
According to drawing
Surface
Scale
1 : 1
Weight
Material
Brass, and others
Date
Name
Designed
21.07.04
G. Hitzler
Checked
Changes
Name of project
Back pack pump
Tools for Filling Port
assembling
SSFFMP PO Box1229
Palembang 30000
Drawing No. BPP 1.4
Sheet No.
Two sheet A4

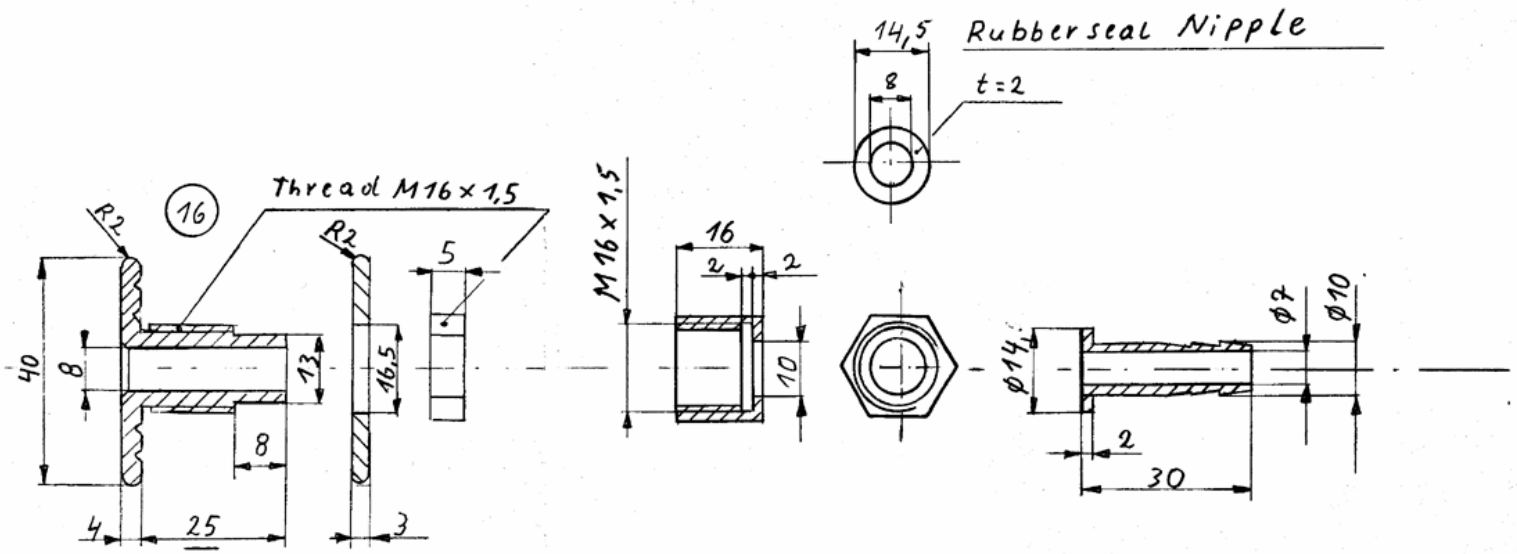

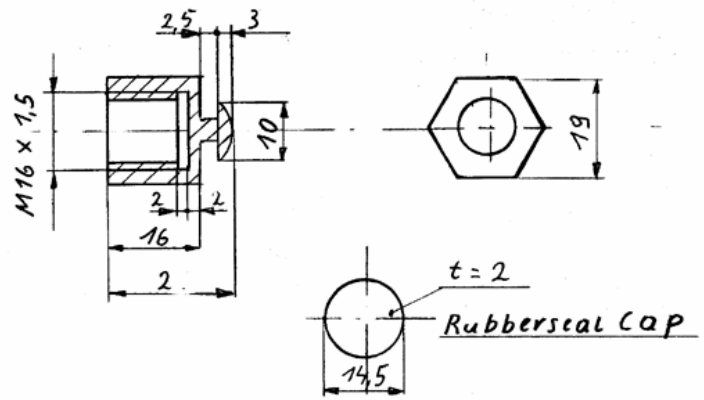

Tolerances	Surface	Scale	Weight
According to drawing	Polished	1 : 1	1,0 kg
		Material: Brass, and others	
	Date	Name	
Designed	26.05.04	G. Hitzler	Name of project: Back pack pump Tank– Hose connector Pos.16
Checked			
Changes	14.08.04	G. Hitzler	
SSFFMP PO Box1229 Palembang 30000		Drawing No.BPP 1.2	Sheet No.

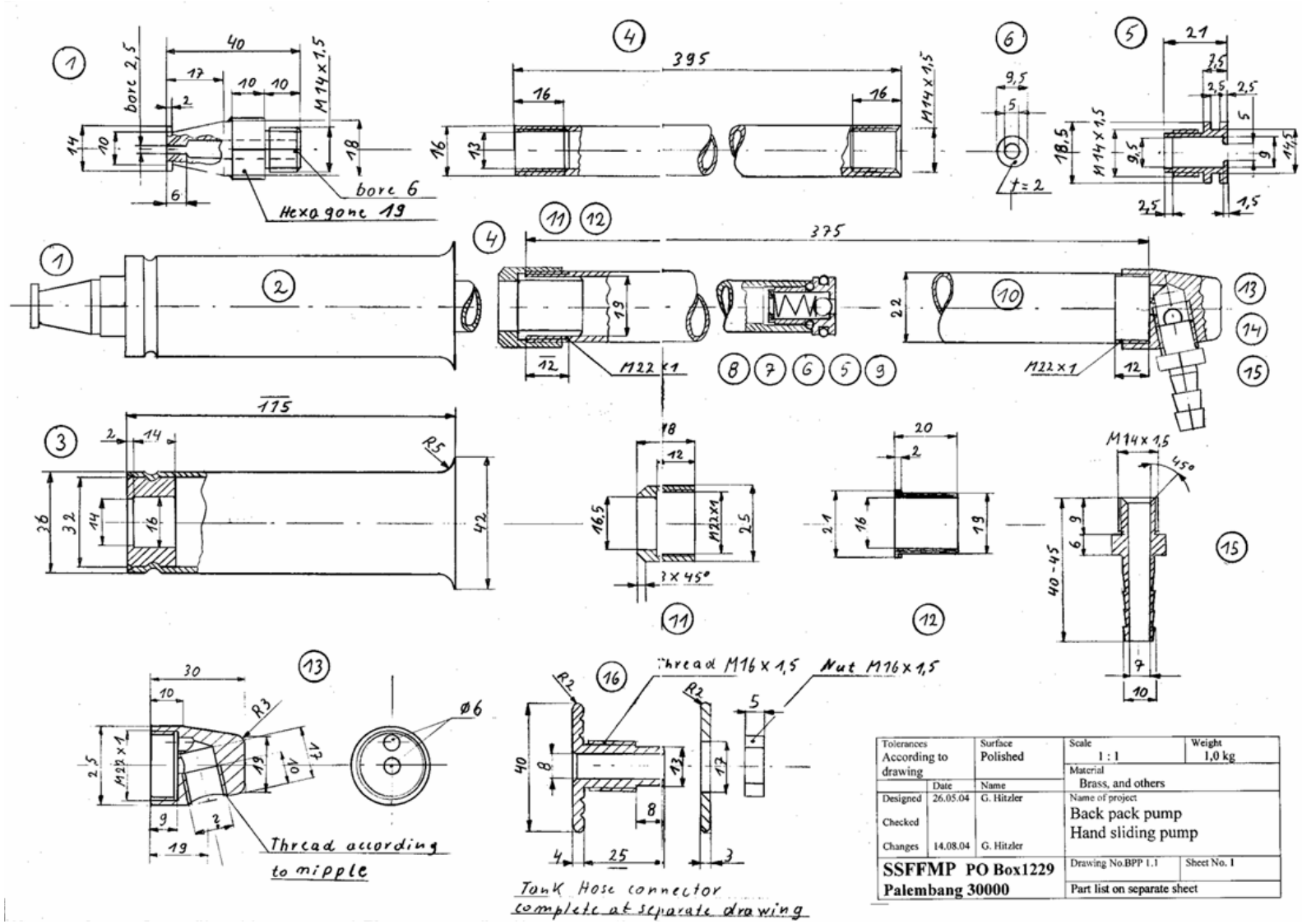
bore 2,5
M14x1,5
bore 6
Hexagone 19
M22x1
Thread according to nipple
Thread M16x1,5
Nut M16x1,5
Tank Hose connector complete at separate drawing
Tolerances According to drawing
Surface Polished
Scale 1 : 1
Weight 1,0 kg
Material Brass, and others
Designed 26.05.04 G. Hitzler
Checked
Changes 14.08.04 G. Hitzler
Name of project Back pack pump Hand sliding pump
SSFFMP PO Box1229 Palembang 30000
Drawing No.BPP 1.1
Sheet No. 1
Part list on separate sheet

6.5 Production drawings hand tools

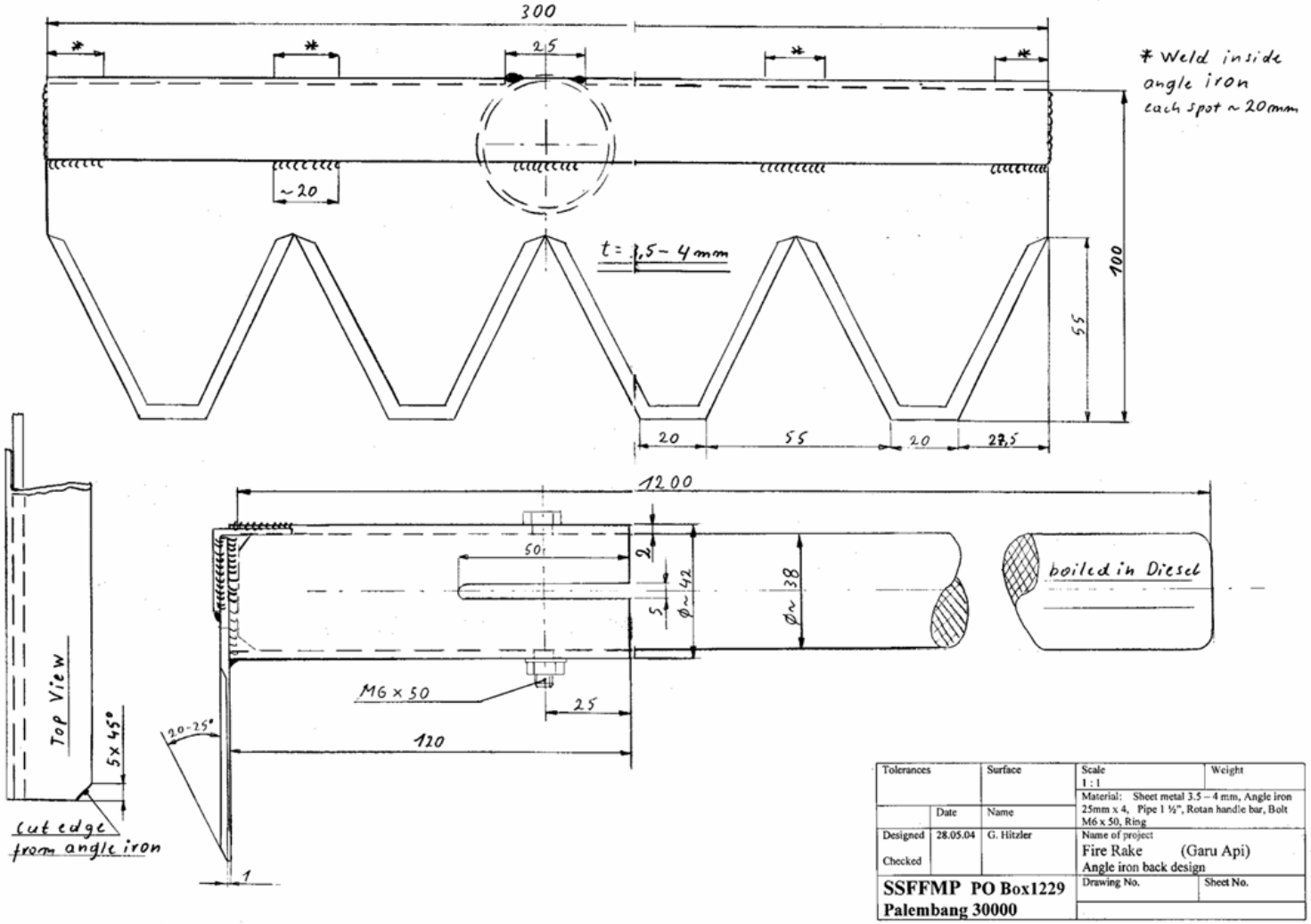

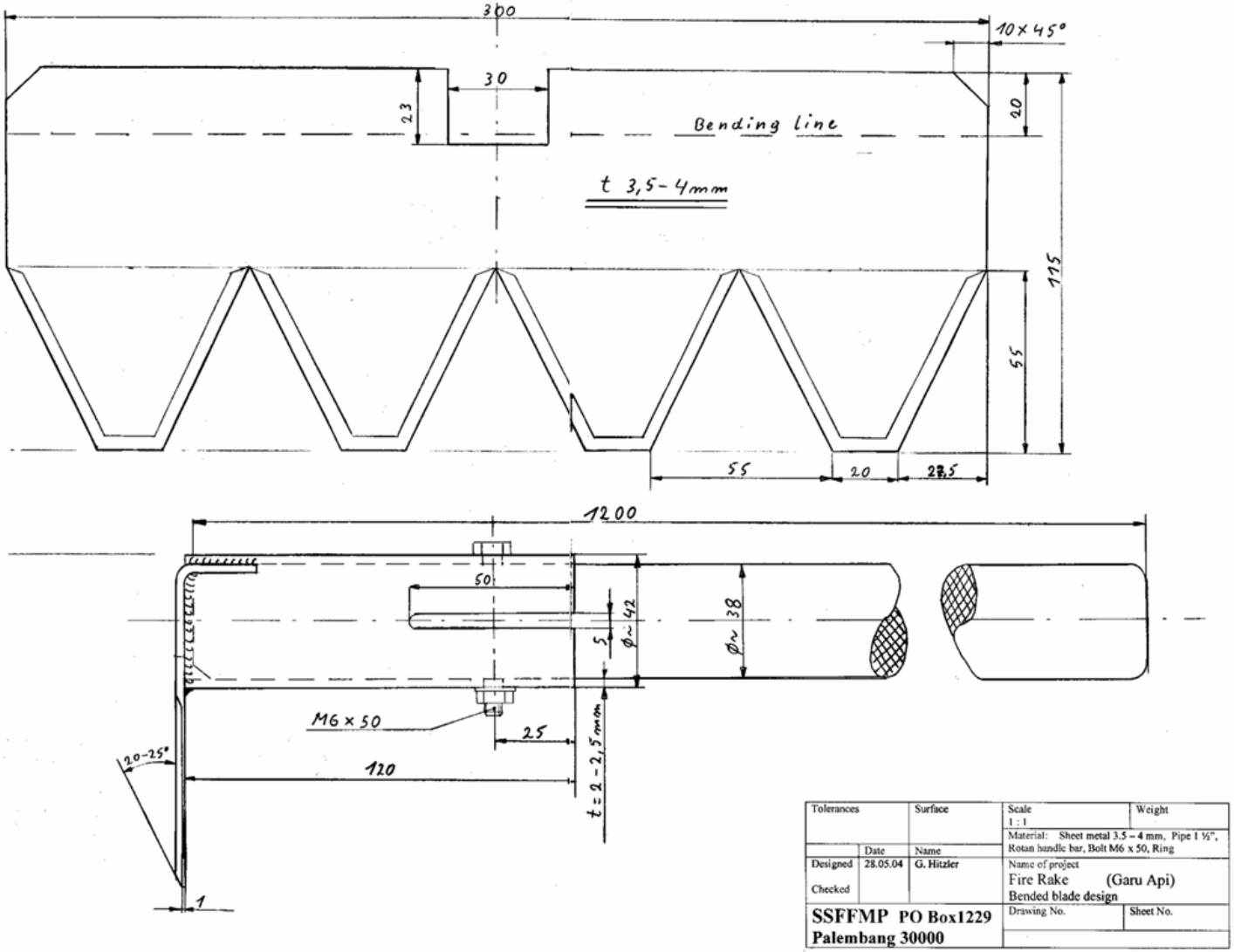
300
10 x 45°
30
23
20
Bending line
t 3,5-4mm
115
55
55
20
27,5
1200
50
Ø~42
Ø~38
5
M6 x 50
25
20-25°
120
t = 2-2,5mm
1
Tolerances
Surface
Scale
1 : 1
Weight
Material: Sheet metal 3.5 – 4 mm, Pipe 1 ½", Rotan handle bar, Bolt M6 x 50, Ring
Date
Name
Designed
28.05.04
G. Hitzler
Checked
Name of project
Fire Rake (Garu Api)
Bended blade design
SSFFMP PO Box1229
Palembang 30000
Drawing No.
Sheet No.

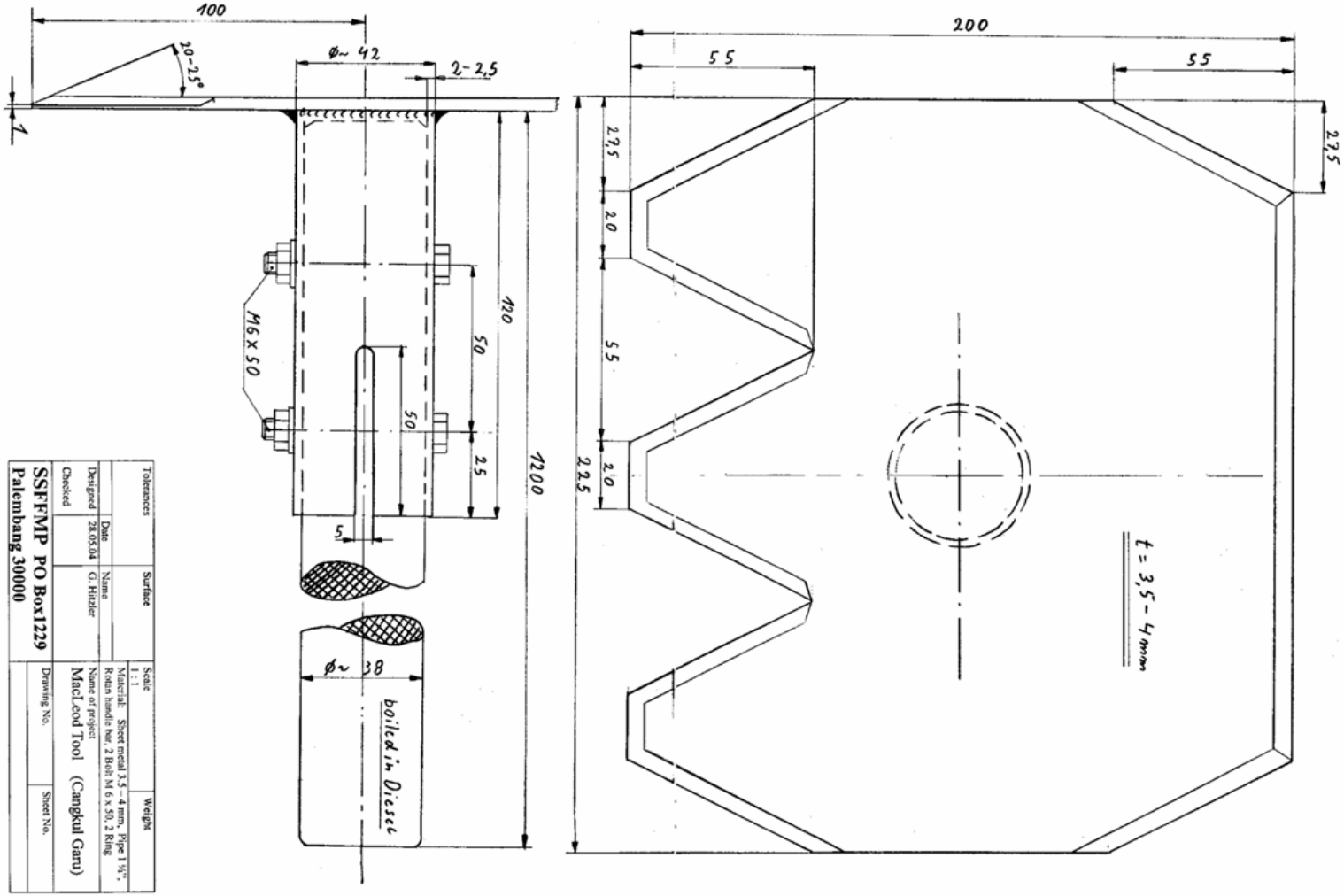
200
55
55
27,5
27,5
20
55
20
22,5
t = 3,5 – 4 mm
100
20-25°
1
ø~ 42
2-2,5
M6 x 50
120
50
50
25
1200
5
ø~ 38
boiled in Diesel
Tolerances
Surface
Scale 1 : 1
Weight
Date
Name
Designed 28.05.04 G. Hätzler
Checked
Material: Sheet metal 3,5 – 4 mm, Pipe 1 ½", Rotan handle bar, 2 Bolt M 6 x 50, 2 Ring
Name of project MacLeod Tool (Cangkul Garu)
Drawing No.
Sheet No.
SSFFMP PO Box1229
Palembang 30000